STEPTREAD SYSTEM

STEPTREADS are precast concrete stair treads. They may be supported by a wood structure or a steel structure. They are available in various colors and finishes. In these details you will find general details and details specific to either wood or steel supports. You may choose all of the details or individual sections that apply to your project. The **STEPTREAD SYSTEM** includes information on both the steps and landing planks for a complete design. These details are available to you in PDF format, CAD format, and DWF format. Stepstone, Inc. has been manufacturing **STEPTREADS** for over 25 years.

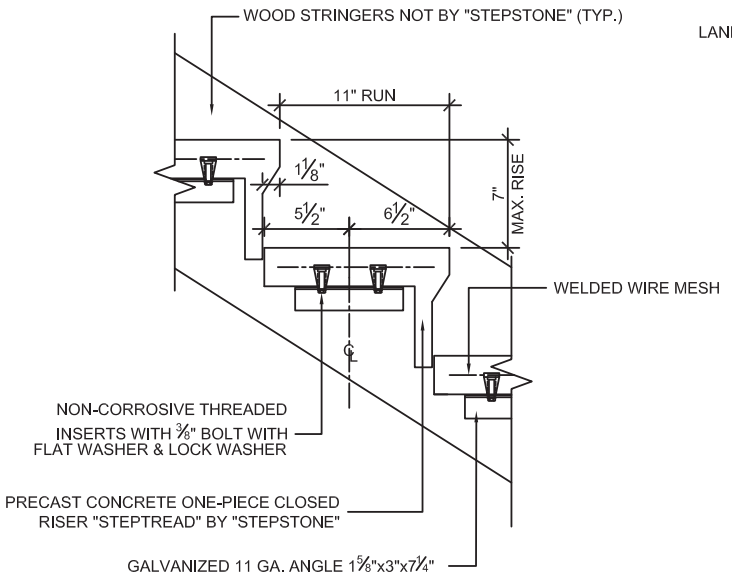

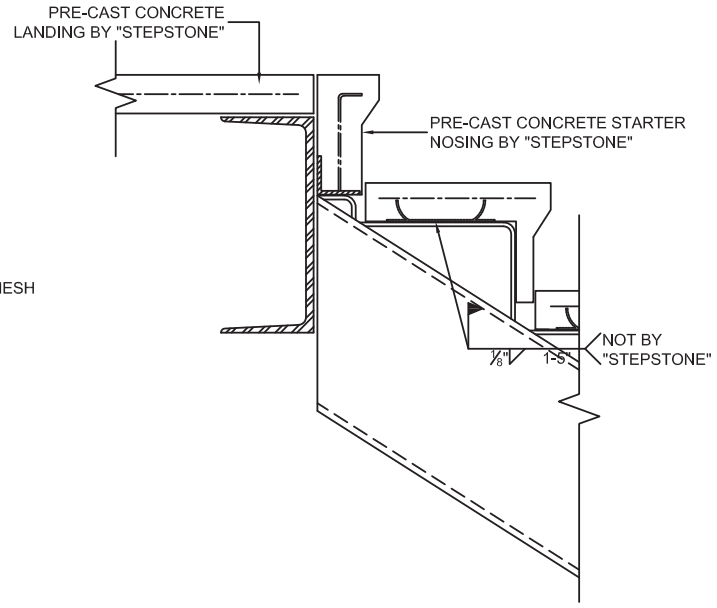

PRECAST CONCRETE TREADS, LANDINGS, AND BALCONIES SHOWN ON PLANS SHALL BE FROM THE "STEPTREAD" SYSTEM BY "STEPSTONE, INC." OF GARDENA, CA. FOR STEEL OR WOOD CONSTRUCTION. THE MANUFACTURER IS TO SUPPLY ALL PRECAST CONCRETE PARTS WITH EACH "STEPTREAD" AND FEATURING EITHER CAST IN THREADED INSERTS FOR BOLTING OR AN EMBEDDED BOTTOM WELD PLATE FOR WELDING. ALL REINFORCING AND CONNECTIONS WILL BE ZINC PLATED. ONLY ITEMS NOTED BY "STEPSTONE, INC." SHALL BE FURNISHED BY "STEPSTONE, INC." SUCH ITEMS SHALL BE INSTALLED BY OTHERS.

800.572.9029 Nationwide Distribution stepstoneinc.com
17025 SO. MAIN ST. GARDENA, CA 90248 | 310-327-7474
13238 SO. FIGUEROA ST. LOS ANGELES, CA 90061 | www.stepstoneinc.com

STEPTREAD SYSTEM

Architectural Details

Table of Contents - Steel Support Systems

General Details/Profiles and Hardware	STP 0.1-04	Page 4-LS, 5-S,
General Details/Closed Riser-Classic Profile	STP 0.1-05	Page6-S
General Details/Closed Riser-Modern Profile	STP 0.1-06	Page 7-S
General Details/Open Riser Detail	STP 0.1-07	Page 8-S
General Details/Straight Stair Landing Detail	STP 0.1-08	Page 9-S
General Details/90° Stair Landing Detail	STP 0.1-09	Page 10-S
General Details/180° Stair Landing Detail/Landing Layout Detail	STP 0.1-12	Page 11-S, 12-LS
Steel Support Layout/Wedge w/Riser Connector Plates, Straight No Landing	STP 0.1-13	Page, 13-LS
Steel Support Layout/Wedge w/Riser Connector Plates, Straight w/Landing	STP 0.1-14	Page 14-S
Steel Support Layout/Wedge w/Riser Connector Plates, 90° Landing	STP 0.1-15	Page 15-S
Steel Support Layout/Wedge w/Riser Connector Plates, 180° Landing	STP 0.1-16	Page 16-S
Steel Support Layout/Closed Riser-Between Stringers, Straight No Landing	STP 2.0-01	Page 17-S
Steel Support Layout/Closed Riser-Between Stringers, Straight Landing	STP 2.0-02	Page 18-S
Steel Support Layout/Closed Riser-Between Stringers, 90° Landing	STP 2.0-03	Page 19-S
Steel Support Layout/Closed Riser-Between Stringers, 180° Landing	STP 2.0-04	Page 20-S
Steel Support Layout/Closed Riser-Above Stringers, Straight No Landing	STP 2.0-05	Page 21-S
Steel Support Layout/Closed Riser-Above Stringers, Straight Landing	STP 2.0-06	Page 22-S
Steel Support Layout/Closed Riser-Above Stringers, 90° Landing	STP 2.0-07	Page 23-S
Steel Support Layout/Closed Riser-Above Stringers, 180° Landing	STP 2.0-08	Page 24-S
Steel Support Layout/Open Riser-Between Stringers, Straight No Landing	STP 2.0-09	Page 25-S
Steel Support Layout/Open Riser-Between Stringers, Straight Landing	STP 2.0-10	Page 26-S
Steel Support Layout/Open Riser-Between Stringers, 90° Landing	STP 2.0-11	Page 27-S
Steel Support Layout/Open Riser-Between Stringers, 180° Landing	STP 2.0-12	Page 28-S
Steel Support Layout/Open Riser-Above Stringers, Straight No Landing	STP 2.0-13	Page 29-S
Steel Support Layout/Open Riser-Above Stringers, Straight No Landing	STP 2.0-14	Page 30-S
Steel Support Layout/Open Riser-Above Stringers, 90° Landing	STP 2.0-15	Page 31-S
Steel Support Layout/Open Riser-Above Stringers, 180° Landing	STP 2.0-16	Page 32-S
Steel Support Details/Bolt on Connection-Between Stringers, Concealed Angle	STP 4.0-01	Page 33-S

800.572.9029 Nationwide Distribution stepstoneinc.com
17025 SO. MAIN ST. GARDENA, CA 90248 | 310-327-7474
13238 SO. FIGUEROA ST. LOS ANGELES, CA 90061 | www.stepstoneinc.com

STEPTREAD SYSTEM

Architectural Details

Table of Contents - Steel Support Systems

Steel Support Details/Weld on Connection-Between Stringers, Exposed Angle	STP 4.0-02	Page 34-S
Steel Support Details/Weld on Connection-Above Stringer	STP 4.0-03	Page 35-S
Steel Support Details/Weld on Connection-Wedge w/ Riser Connector Plates	STP 4.0-04	Page 36-S
Steel Support Details/Bolt on Section-Closed Riser, Between Stringers	STP 4.0-05	Page 37-S
Steel Support Details/Weld on Section-Closed Risers, Between Stringers	STP 4.0-06	Page 38-S
Steel Support Details/Weld on Section-Closed Risers, Above Stringers	STP 4.0-07	Page 39-S
Steel Support Details/Bolt on Section-Open Riser, Top Step, Between Stringers	STP 4.0-08	Page 40-S
Steel Support Details/Bolt on Section-Open Riser, Between Stringers	STP 4.0-09	Page 41-S
Steel Support Details/Weld on Section-Open Riser, Between Stringers	STP 4.0-10	Page 42-S
Steel Support Details/Weld on Section-Open Riser, Above Stringers	STP 4.0-11	Page 43-S
Steel Support Details/Weld on Section-Open Riser, Top Step, Above Stringers	STP 4.0-12	Page 44-S
Steel Support Details/Weld on Section-Starter Step, Between Stringers	STP 4.0-13	Page 45-S
Steel Support Details/Weld on Section-Starter Step, Above Stringer	STP 4.0-14	Page 46-S
Steel Support Details/Bolt on Section-Starter Step, Side Mount “A” Bracket	STP 4.0-15	Page 47-S
Steel Support Details/Bolt on Section-Starter Step, Back Mount “B” Bracket	STP 4.0-16	Page 48-S
Steel Support Details/Open Riser-Above Stringer-Bolt on	STP 4.0-17	Page 49-S
Steel Support Details/Closed Riser-Above Stringer-Bolt on	STP 4.0-18	Page 50-S
Steel Support Details/Closed Riser- Between Stringers, Weld on, 90° Landing	STP 4.1-01	Page 51-S
Steel Support Details/Closed Riser- Above Stringers, Weld on, 90° Landing	STP 4.1-02	Page 52-S
Steel Support Details/Open Riser- Between Stringers, Weld on, 90° Landing	STP 4.1-03	Page 53-S
Steel Support Details/Open Riser- Above Stringers, Weld on, 90° Landing	STP 4.1-04	Page 54-S
Steel Support Details/Between Stringers-Weld on, 180° Landing	STP 4.1-05	Page 55-S
Steel Support Details/Above Stringers-Weld on, 180° Landing	STP 4.1-06	Page 56-S
Steel Support Details/ Weld on-Wedge w/ Riser Connector Plates, Landing	STP 4.1-07	Page 57-S
Steel Support Details/Between Stringers-Bolt on, Straight Landing	STP 4.1-09	Page 58-S
Steel Support Details/Between Stringers-Weld on, Straight Landing	STP 4.1-10	Page 59-S
Steel Support Details/Above Stringers-Weld on, Straight Landing	STP 4.1-11	Page 60-S

800.572.9029 Nationwide Distribution stepstoneinc.com
17025 SO. MAIN ST. GARDENA, CA 90248 | 310-327-7474
13238 SO. FIGUEROA ST. LOS ANGELES, CA 90061 | www.stepstoneinc.com

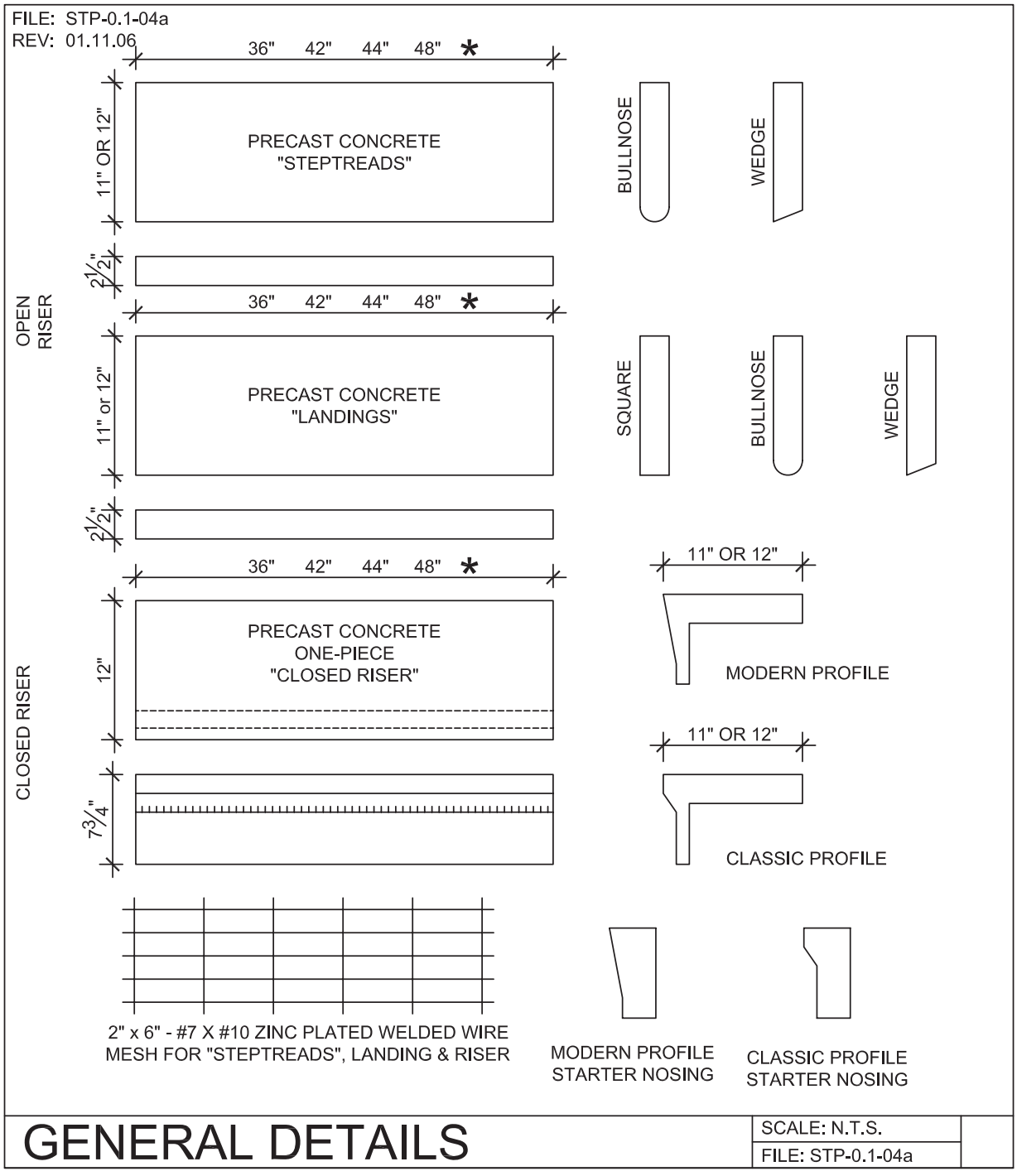

GENERAL DETAILS

SCALE: N.T.S.
FILE: STP-0.1-04a

800.572.9029 Nationwide Distribution stepstoneinc.com
17025 SO. MAIN ST. GARDENA, CA 90248 | 310-327-7474
13238 SO. FIGUEROA ST. LOS ANGELES, CA 90061 | www.stepstoneinc.com

FILE: STP-0.1-04b
REV: 08.30.12

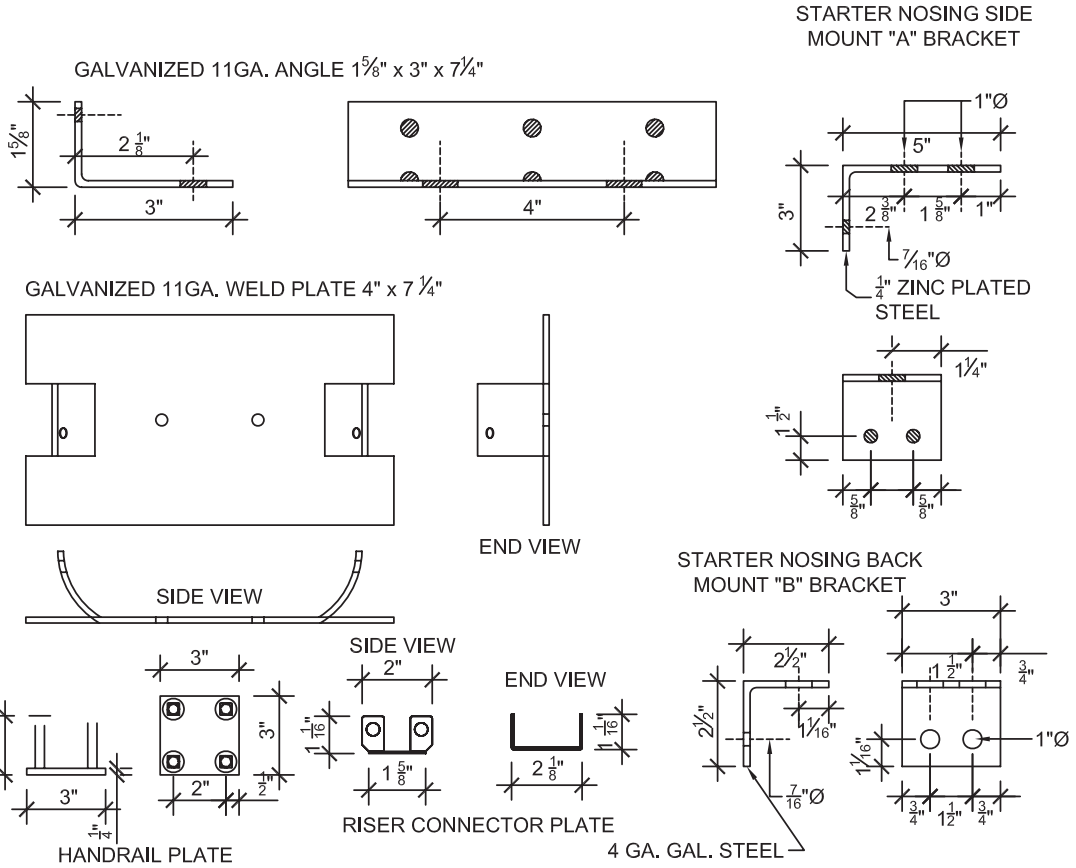

1. THIS SHEET IS INTENDED TO BE THE STANDARD PLAN ONLY FOR "STEPSTONE" PRECAST CONCRETE TREAD AND RISER SYSTEM. THE PURPOSE OF THIS STANDARD PLAN IS TO SHOW ONLY THE TREADS AND RISERS AND THEIR DIRECT CONNECTIONS TO THE SUPPORTING STRUCTURE.
2. THIS STANDARD PLAN DOES NOT COVER THE DESIGN OR INSTALLATION OF ANY SUPPORTING STRUCTURE, HANDRAILS OR GUARDRAILS. IT DOES NOT COVER ACCESS REQUIREMENTS.
3. ONLY ITEMS NOTED BY "STEPSTONE" SHALL BE FURNISHED BY "STEPSTONE". SUCH ITEMS SHALL BE INSTALLED BY OTHERS. "STEPSTONE" SHALL NOT BE RESPONSIBLE FOR THE QUALITY OF THE INSTALLATION.
4. ALL ITEMS NOTED AS "NOT BY STEPSTONE" SHALL BE FURNISHED AND INSTALLED BY OTHERS. "STEPSTONE" SHALL NOT BE RESPONSIBLE FOR THE DESIGN AND INSTALLATION OF SUCH ITEMS.
5. ALL WELDS NOTED AS "NOT BY STEPSTONE" ARE THE MINIMUM SIZE AND LENGTH REQUIRED BY "STEPSTONE" AND SHALL BE MADE BY OTHERS. "STEPSTONE" SHALL NOT BE RESPONSIBLE FOR THE INSPECTION OR QUALITY OF SUCH WELDS.
6. ALL ITEMS HAVE STANDARD MANUFACTURING TOLERANCES.
7. ALLOW ⅛" -3/16" CLEARANCE BETWEEN TREADS & STRINGERS ON EACH SIDE.
8. ALL CONCRETE SHALL BE 5,000 P.S.I. (TYPICAL)
9. MAXIMUM TREAD FREE SPAN IS 60". MAXIMUM LANDING PLANK FREE SPAN IS 60".

* CUSTOM LENGTHS ARE AVAILABLE.

GENERAL DETAILS

SCALE: N.T.S.

800.572.9029 Nationwide Distribution stepstoneinc.com
17025 SO. MAIN ST. GARDENA, CA 90248 | 310-327-7474
13238 SO. FIGUEROA ST. LOS ANGELES, CA 90061 | www.stepstoneinc.com

FILE: STP-0.1-05
REV: 01.11.06

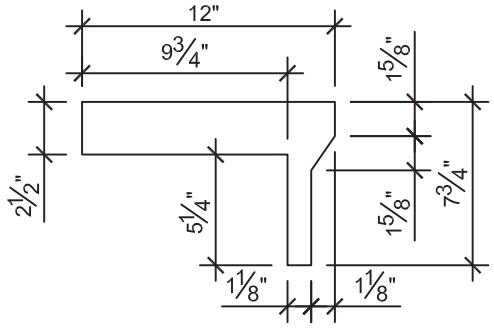

CLASSIC PROFILE

A

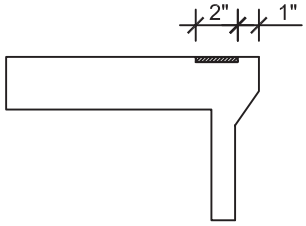

CLASSIC PROFILE WITH INTEGRAL AGGREGATE WARNING DETAIL

B

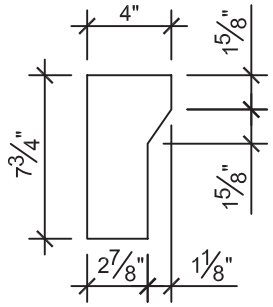

CLASSIC PROFILE STARTER NOSING

C

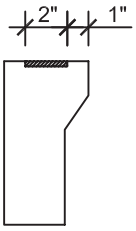

CLASSIC PROFILE SARTER NOSING WITH INTEGRAL AGGREGATE WARNING DETAIL

D

TREAD DETAILS-CLASSIC

SCALE: N.T.S.
FILE: STP-0.1-05

PRECAST CONCRETE TREADS, LANDINGS, AND BALCONIES SHOWN ON PLANS SHALL BE FROM THE "STEPTREAD" SYSTEM BY "STEPSTONE, INC." OF GARDENA, CA. FOR STEEL OR WOOD CONSTRUCTION. THE MANUFACTURER IS TO SUPPLY ALL PRECAST CONCRETE PARTS WITH EACH "STEPTREAD" AND FEATURING EITHER CAST IN THREADED INSERTS FOR BOLTING OR AN EMBEDDED BOTTOM WELD PLATE FOR WELDING. ALL REINFORCING AND CONNECTIONS WILL BE ZINC PLATED. ONLY ITEMS NOTED BY "STEPSTONE, INC." SHALL BE FURNISHED BY "STEPSTONE, INC." SUCH ITEMS SHALL BE INSTALLED BY OTHERS.

800.572.9029 Nationwide Distribution stepstoneinc.com
17025 SO. MAIN ST. GARDENA, CA 90248 | 310-327-7474
13238 SO. FIGUEROA ST. LOS ANGELES, CA 90061 | www.stepstoneinc.com

FILE: STP-0.1-06
REV: 01.11.06

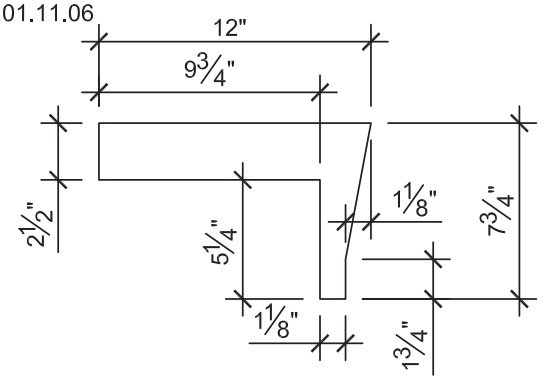

MODERN PROFILE

A

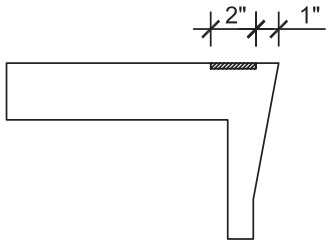

MODERN PROFILE WITH INTEGRAL AGGREGATE WARNING DETAIL

B

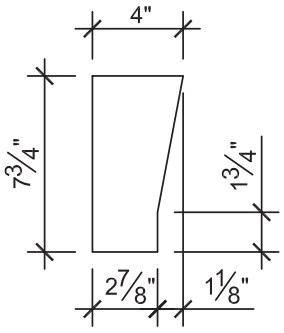

MODERN PROFILE STARTER NOSING

C

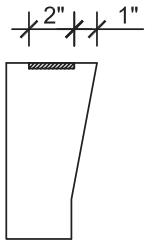

MODERN PROFILE STARTER NOSING WITH INTEGRAL AGGREGATE WARNING DETAIL

D

TREAD DETAILS-MODERN

SCALE: N.T.S.
FILE: STP-0.1-06

PRECAST CONCRETE TREADS, LANDINGS, AND BALCONIES SHOWN ON PLANS SHALL BE FROM THE "STEPTREAD" SYSTEM BY "STEPSTONE, INC." OF GARDENA, CA. FOR STEEL OR WOOD CONSTRUCTION. THE MANUFACTURER IS TO SUPPLY ALL PRECAST CONCRETE PARTS WITH EACH "STEPTREAD" AND FEATURING EITHER CAST IN THREADED INSERTS FOR BOLTING OR AN EMBEDDED BOTTOM WELD PLATE FOR WELDING. ALL REINFORCING AND CONNECTIONS WILL BE ZINC PLATED. ONLY ITEMS NOTED BY "STEPSTONE, INC." SHALL BE FURNISHED BY "STEPSTONE, INC." SUCH ITEMS SHALL BE INSTALLED BY OTHERS.

800.572.9029 Nationwide Distribution stepstoneinc.com
17025 SO. MAIN ST. GARDENA, CA 90248 | 310-327-7474
13238 SO. FIGUEROA ST. LOS ANGELES, CA 90061 | www.stepstoneinc.com

FILE: STP-0.1-07
REV: 01.11.06

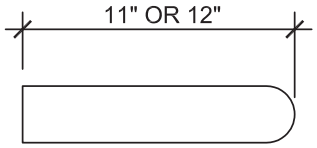

BULLNOSE PROFILE

A

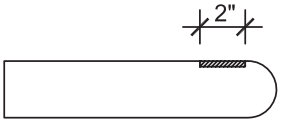

BULLNOSE PROFILE WITH INTEGRAL AGGREGATE WARNING DETAIL

B

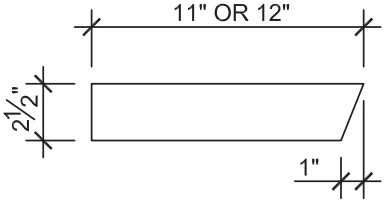

WEDGE PROFILE

C

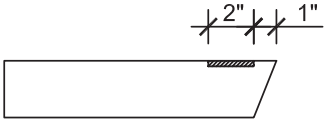

WEDGE PROFILE WITH INTEGRAL AGGREGATE WARNING DETAIL

D

TREAD DETAILS-OPEN

SCALE: N.T.S.
FILE: STP-0.1-07

PRECAST CONCRETE TREADS, LANDINGS, AND BALCONIES SHOWN ON PLANS SHALL BE FROM THE "STEPTREAD" SYSTEM BY "STEPSTONE, INC." OF GARDENA, CA. FOR STEEL OR WOOD CONSTRUCTION. THE MANUFACTURER IS TO SUPPLY ALL PRECAST CONCRETE PARTS WITH EACH "STEPTREAD" AND FEATURING EITHER CAST IN THREADED INSERTS FOR BOLTING OR AN EMBEDDED BOTTOM WELD PLATE FOR WELDING. ALL REINFORCING AND CONNECTIONS WILL BE ZINC PLATED. ONLY ITEMS NOTED BY "STEPSTONE, INC." SHALL BE FURNISHED BY "STEPSTONE, INC." SUCH ITEMS SHALL BE INSTALLED BY OTHERS.

800.572.9029 Nationwide Distribution stepstoneinc.com
17025 SO. MAIN ST. GARDENA, CA 90248 | 310-327-7474
13238 SO. FIGUEROA ST. LOS ANGELES, CA 90061 | www.stepstoneinc.com

FILE: STP-0.1-08
REV: 08.30.12

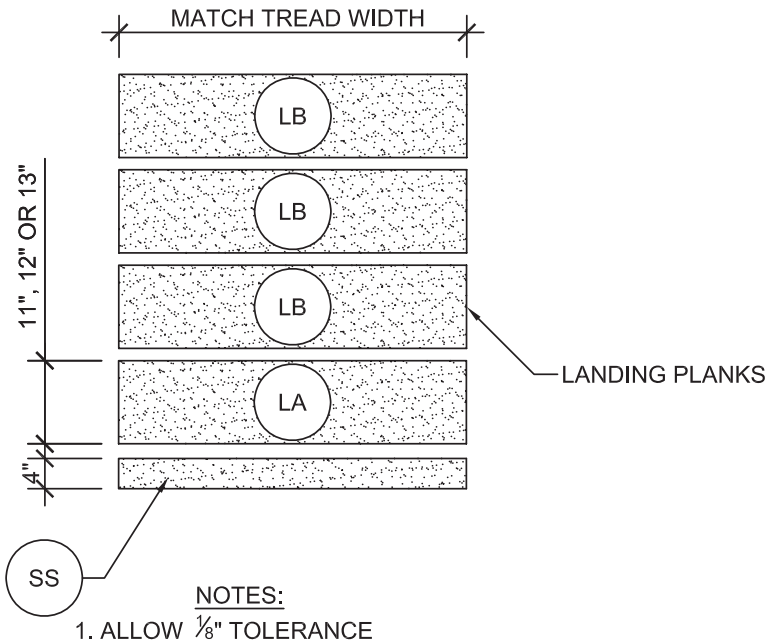

NOTES:

1. ALLOW 1/8" TOLERANCE BETWEEN LANDING PLANKS.

2. MAXIMUM SPAN IS 60" FOR CLOSED RISER TREADS, OPEN RISER TREADS AND LANDING PLANKS

STRAIGHT STAIR INTERMEDIATE/ TOP LANDING	SCALE: 1/2"=1'-0"
	FILE: STP-0.1-08

PRECAST CONCRETE TREADS, LANDINGS, AND BALCONIES SHOWN ON PLANS SHALL BE FROM THE "STEPTREAD" SYSTEM BY "STEPSTONE, INC." OF GARDENA, CA. FOR STEEL OR WOOD CONSTRUCTION. THE MANUFACTURER IS TO SUPPLY ALL PRECAST CONCRETE PARTS WITH EACH "STEPTREAD" AND FEATURING EITHER CAST IN THREADED INSERTS FOR BOLTING OR AN EMBEDDED BOTTOM WELD PLATE FOR WELDING. ALL REINFORCING AND CONNECTIONS WILL BE ZINC PLATED. ONLY ITEMS NOTED BY "STEPSTONE, INC." SHALL BE FURNISHED BY "STEPSTONE, INC." SUCH ITEMS SHALL BE INSTALLED BY OTHERS.

800.572.9029 Nationwide Distribution stepstoneinc.com
17025 SO. MAIN ST. GARDENA, CA 90248 | 310-327-7474
13238 SO. FIGUEROA ST. LOS ANGELES, CA 90061 | www.stepstoneinc.com

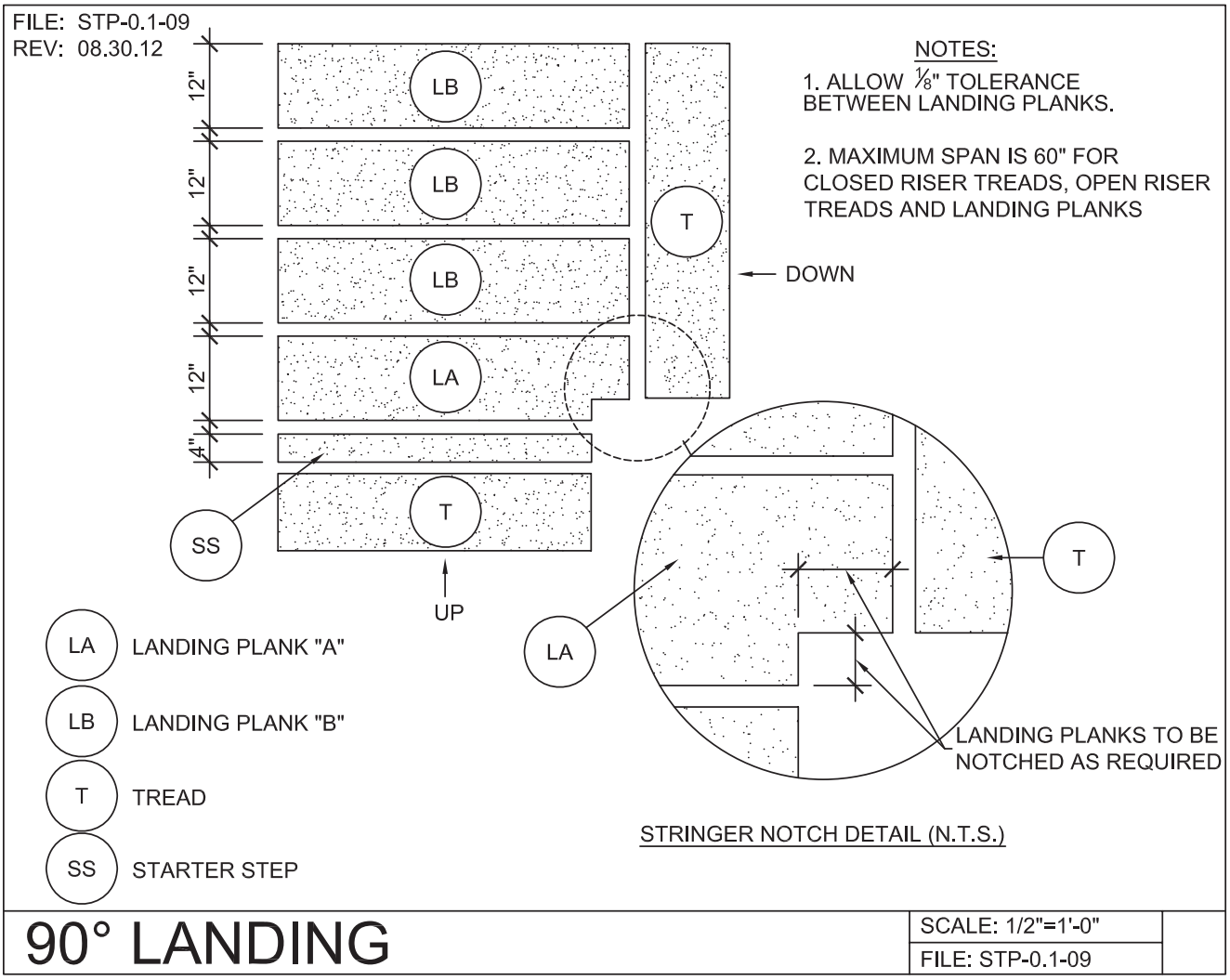

90° LANDING

SCALE: 1/2"=1'-0"
FILE: STP-0.1-09

PRECAST CONCRETE TREADS, LANDINGS, AND BALCONIES SHOWN ON PLANS SHALL BE FROM THE "STEPTREAD" SYSTEM BY "STEPSTONE, INC." OF GARDENA, CA. FOR STEEL OR WOOD CONSTRUCTION. THE MANUFACTURER IS TO SUPPLY ALL PRECAST CONCRETE PARTS WITH EACH "STEPTREAD" AND FEATURING EITHER CAST IN THREADED INSERTS FOR BOLTING OR AN EMBEDDED BOTTOM WELD PLATE FOR WELDING. ALL REINFORCING AND CONNECTIONS WILL BE ZINC PLATED. ONLY ITEMS NOTED BY "STEPSTONE, INC." SHALL BE FURNISHED BY "STEPSTONE, INC." SUCH ITEMS SHALL BE INSTALLED BY OTHERS.

800.572.9029 Nationwide Distribution stepstoneinc.com
17025 SO. MAIN ST. GARDENA, CA 90248 | 310-327-7474
13238 SO. FIGUEROA ST. LOS ANGELES, CA 90061 | www.stepstoneinc.com

FILE: STP-0.1-12a
REV: 01.11.06

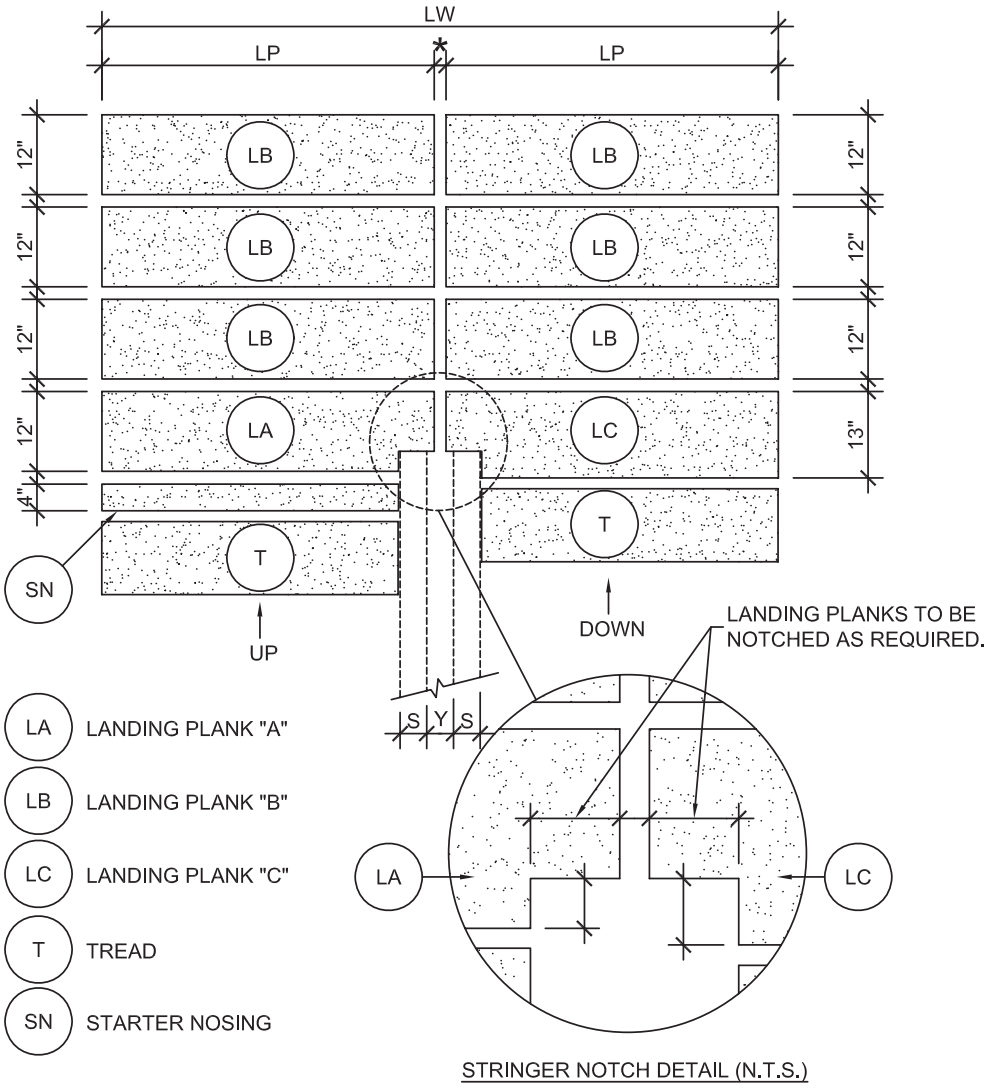

180° LANDING

SCALE: N.T.S.	
FILE: STP-0.1-12a	

800.572.9029 Nationwide Distribution stepstoneinc.com
17025 SO. MAIN ST. GARDENA, CA 90248 | 310-327-7474
13238 SO. FIGUEROA ST. LOS ANGELES, CA 90061 | www.stepstoneinc.com

FILE: STP-0.1-12b
REV: 01.11.06

LANDING SCHEDULE		
TREAD LENGTH (T)	LANDING PLANK LENGTH (LP)	LANDING WIDTH OUTSIDE DIM. (LW)
36"	LP=T+S+ ½Y	LW=2(LP)+*
38"		
40"		
42"		
44"		
46"		
48"		

** ALL ITEMS HAVE STANDARD MAUFACTURING TOLERANCES.
* ALLOW ⅛" TOLERANCE BETWEEN LANDING PLANKS.
Y = SPACE BETWEEN STRINGERS.
S = STRINGERS

EXAMPLE:

T=36", S=3", & Y=6"

THEN:
LP=36+3+½(6)=42"
LP=42"+ **

LW=2(42)+ **
LW=84"+ **

180° LANDING

SCALE: N.T.S.
FILE: STP-0.1-12b

800.572.9029 Nationwide Distribution stepstoneinc.com
17025 SO. MAIN ST. GARDENA, CA 90248 | 310-327-7474
13238 SO. FIGUEROA ST. LOS ANGELES, CA 90061 | www.stepstoneinc.com

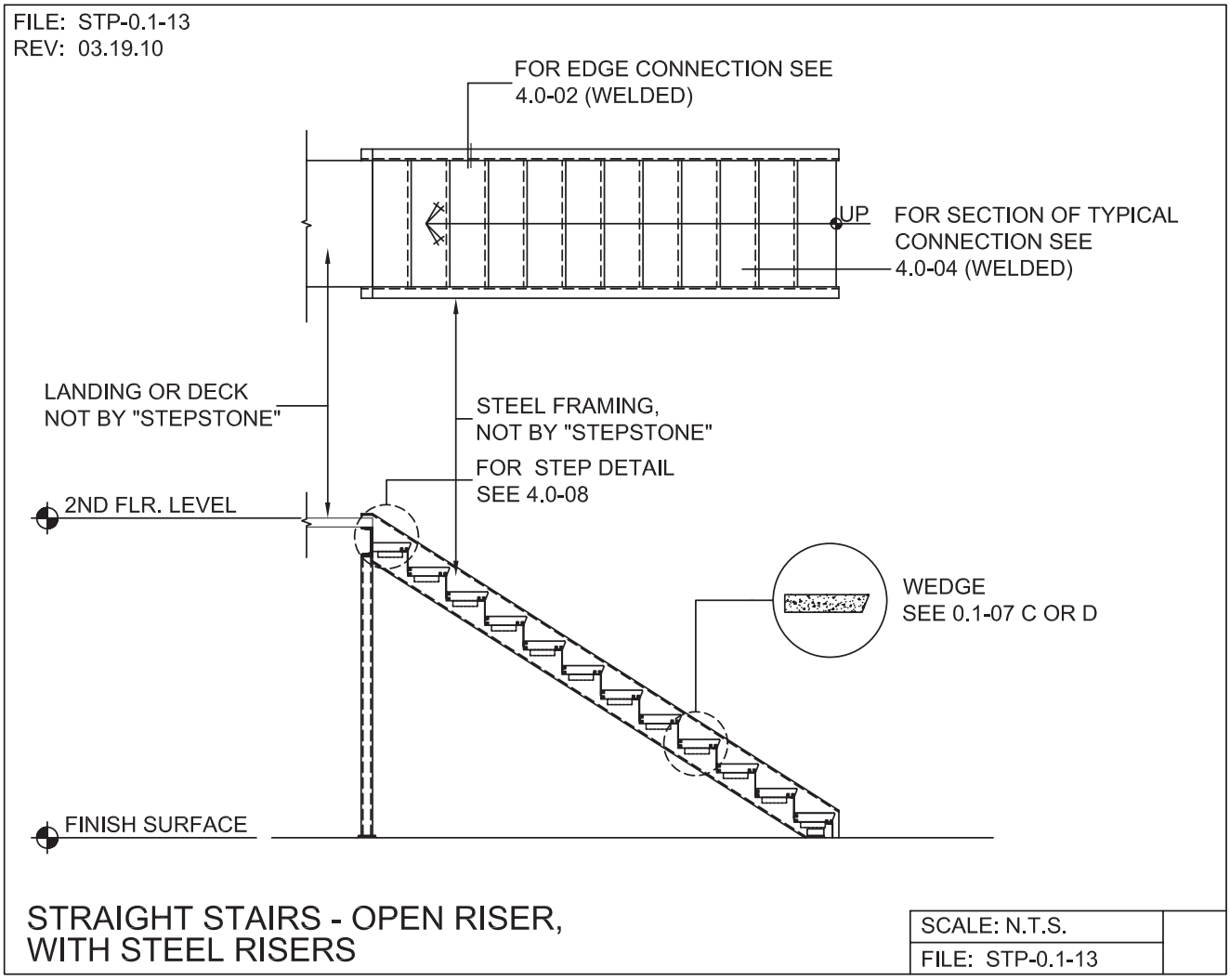

PRECAST CONCRETE TREADS, LANDINGS, AND BALCONIES SHOWN ON PLANS SHALL BE FROM THE "STEPTREAD" SYSTEM BY "STEPSTONE, INC." OF GARDENA, CA. FOR STEEL OR WOOD CONSTRUCTION. THE MANUFACTURER IS TO SUPPLY ALL PRECAST CONCRETE PARTS WITH EACH "STEPTREAD" AND FEATURING EITHER CAST IN THREADED INSERTS FOR BOLTING OR AN EMBEDDED BOTTOM WELD PLATE FOR WELDING. ALL REINFORCING AND CONNECTIONS WILL BE ZINC PLATED. ONLY ITEMS NOTED BY "STEPSTONE, INC." SHALL BE FURNISHED BY "STEPSTONE, INC." SUCH ITEMS SHALL BE INSTALLED BY OTHERS.

800.572.9029 Nationwide Distribution stepstoneinc.com
17025 SO. MAIN ST. GARDENA, CA 90248 | 310-327-7474
13238 SO. FIGUEROA ST. LOS ANGELES, CA 90061 | www.stepstoneinc.com

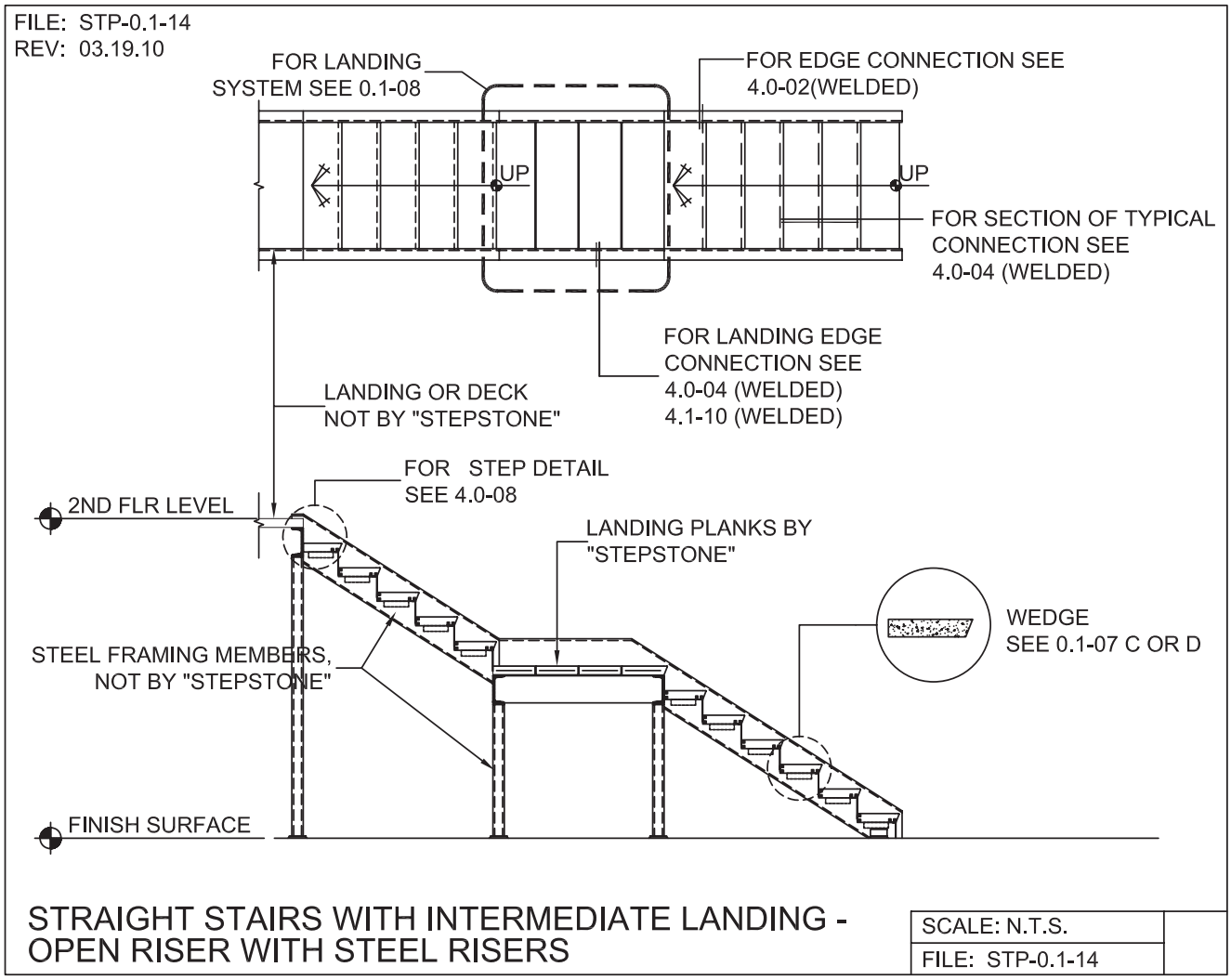

PRECAST CONCRETE TREADS, LANDINGS, AND BALCONIES SHOWN ON PLANS SHALL BE FROM THE "STEPTREAD" SYSTEM BY "STEPSTONE, INC." OF GARDENA, CA. FOR STEEL OR WOOD CONSTRUCTION. THE MANUFACTURER IS TO SUPPLY ALL PRECAST CONCRETE PARTS WITH EACH "STEPTREAD" AND FEATURING EITHER CAST IN THREADED INSERTS FOR BOLTING OR AN EMBEDDED BOTTOM WELD PLATE FOR WELDING. ALL REINFORCING AND CONNECTIONS WILL BE ZINC PLATED. ONLY ITEMS NOTED BY "STEPSTONE, INC." SHALL BE FURNISHED BY "STEPSTONE, INC." SUCH ITEMS SHALL BE INSTALLED BY OTHERS.

800.572.9029 Nationwide Distribution stepstoneinc.com
17025 SO. MAIN ST. GARDENA, CA 90248 | 310-327-7474
13238 SO. FIGUEROA ST. LOS ANGELES, CA 90061 | www.stepstoneinc.com

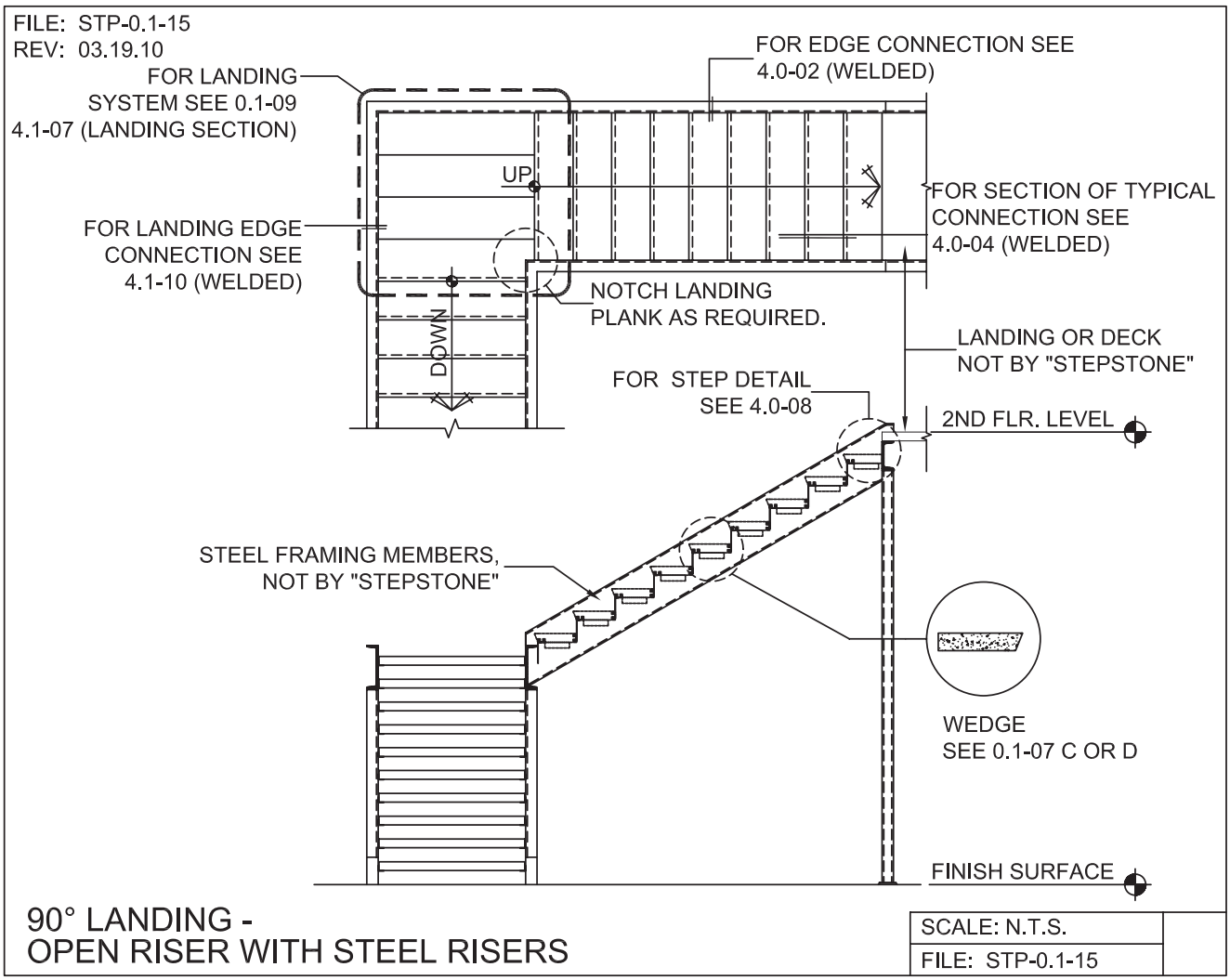

PRECAST CONCRETE TREADS, LANDINGS, AND BALCONIES SHOWN ON PLANS SHALL BE FROM THE "STEPTREAD" SYSTEM BY "STEPSTONE, INC." OF GARDENA, CA. FOR STEEL OR WOOD CONSTRUCTION. THE MANUFACTURER IS TO SUPPLY ALL PRECAST CONCRETE PARTS WITH EACH "STEPTREAD" AND FEATURING EITHER CAST IN THREADED INSERTS FOR BOLTING OR AN EMBEDDED BOTTOM WELD PLATE FOR WELDING. ALL REINFORCING AND CONNECTIONS WILL BE ZINC PLATED. ONLY ITEMS NOTED BY "STEPSTONE, INC." SHALL BE FURNISHED BY "STEPSTONE, INC." SUCH ITEMS SHALL BE INSTALLED BY OTHERS.

800.572.9029 Nationwide Distribution stepstoneinc.com
17025 SO. MAIN ST. GARDENA, CA 90248 | 310-327-7474
13238 SO. FIGUEROA ST. LOS ANGELES, CA 90061 | www.stepstoneinc.com

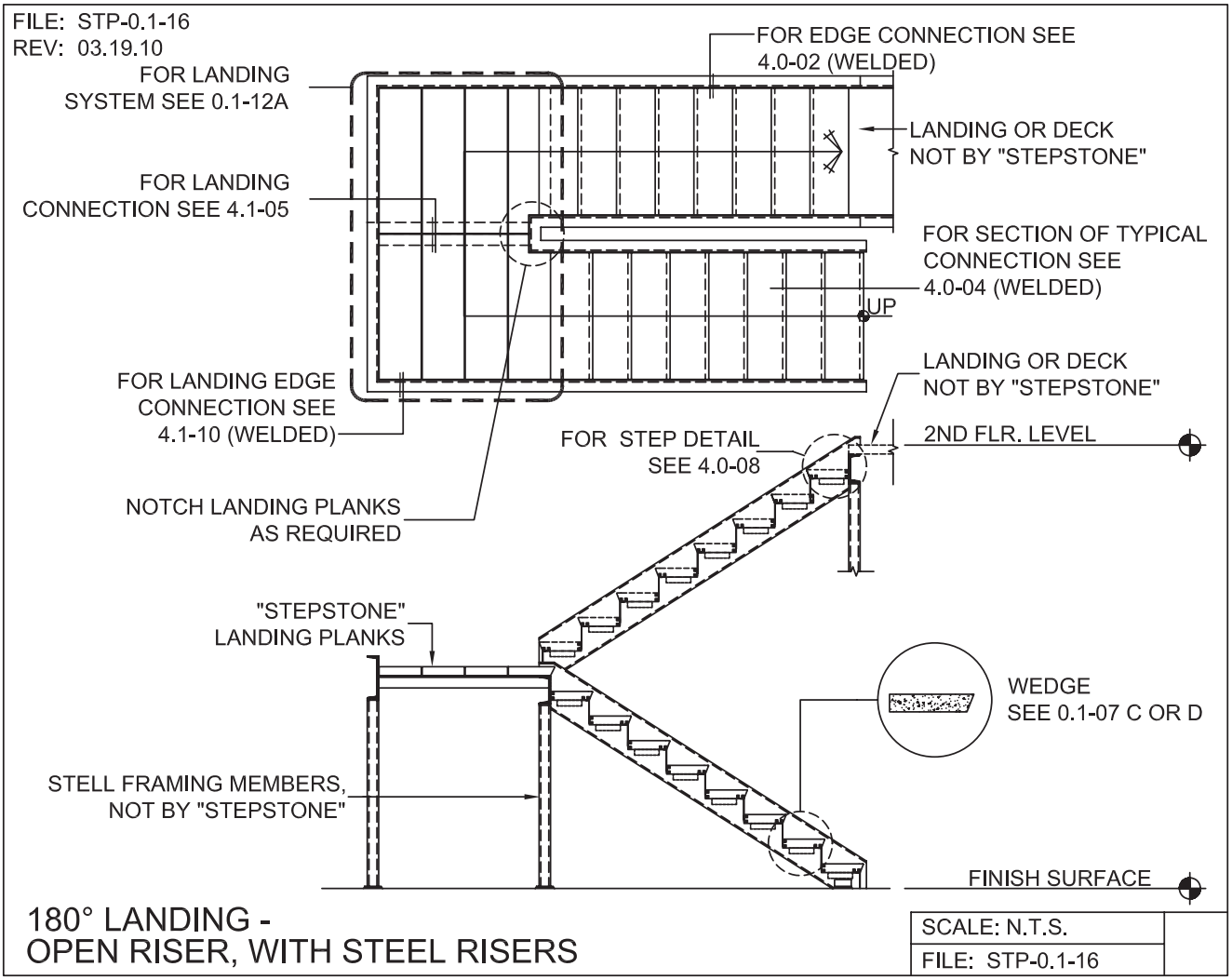

PRECAST CONCRETE TREADS, LANDINGS, AND BALCONIES SHOWN ON PLANS SHALL BE FROM THE "STEPTREAD" SYSTEM BY "STEPSTONE, INC." OF GARDENA, CA. FOR STEEL OR WOOD CONSTRUCTION. THE MANUFACTURER IS TO SUPPLY ALL PRECAST CONCRETE PARTS WITH EACH "STEPTREAD" AND FEATURING EITHER CAST IN THREADED INSERTS FOR BOLTING OR AN EMBEDDED BOTTOM WELD PLATE FOR WELDING. ALL REINFORCING AND CONNECTIONS WILL BE ZINC PLATED. ONLY ITEMS NOTED BY "STEPSTONE, INC." SHALL BE FURNISHED BY "STEPSTONE, INC." SUCH ITEMS SHALL BE INSTALLED BY OTHERS.

800.572.9029 Nationwide Distribution stepstoneinc.com
17025 SO. MAIN ST. GARDENA, CA 90248 | 310-327-7474
13238 SO. FIGUEROA ST. LOS ANGELES, CA 90061 | www.stepstoneinc.com

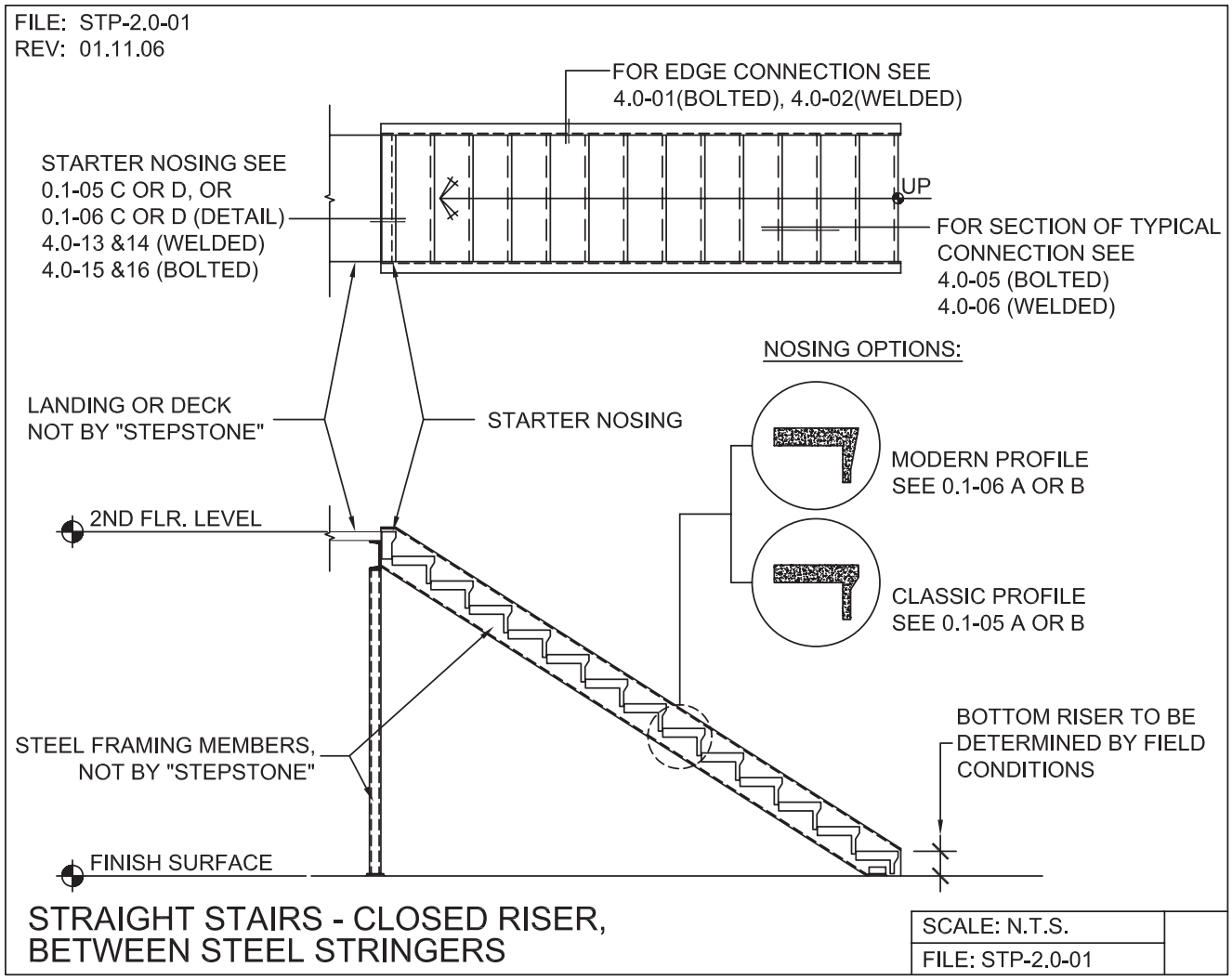

PRECAST CONCRETE TREADS, LANDINGS, AND BALCONIES SHOWN ON PLANS SHALL BE FROM THE "STEPTREAD" SYSTEM BY "STEPSTONE, INC." OF GARDENA, CA. FOR STEEL OR WOOD CONSTRUCTION. THE MANUFACTURER IS TO SUPPLY ALL PRECAST CONCRETE PARTS WITH EACH "STEPTREAD" AND FEATURING EITHER CAST IN THREADED INSERTS FOR BOLTING OR AN EMBEDDED BOTTOM WELD PLATE FOR WELDING. ALL REINFORCING AND CONNECTIONS WILL BE ZINC PLATED. ONLY ITEMS NOTED BY "STEPSTONE, INC." SHALL BE FURNISHED BY "STEPSTONE, INC." SUCH ITEMS SHALL BE INSTALLED BY OTHERS.

800.572.9029 Nationwide Distribution stepstoneinc.com
17025 SO. MAIN ST. GARDENA, CA 90248 | 310-327-7474
13238 SO. FIGUEROA ST. LOS ANGELES, CA 90061 | www.stepstoneinc.com

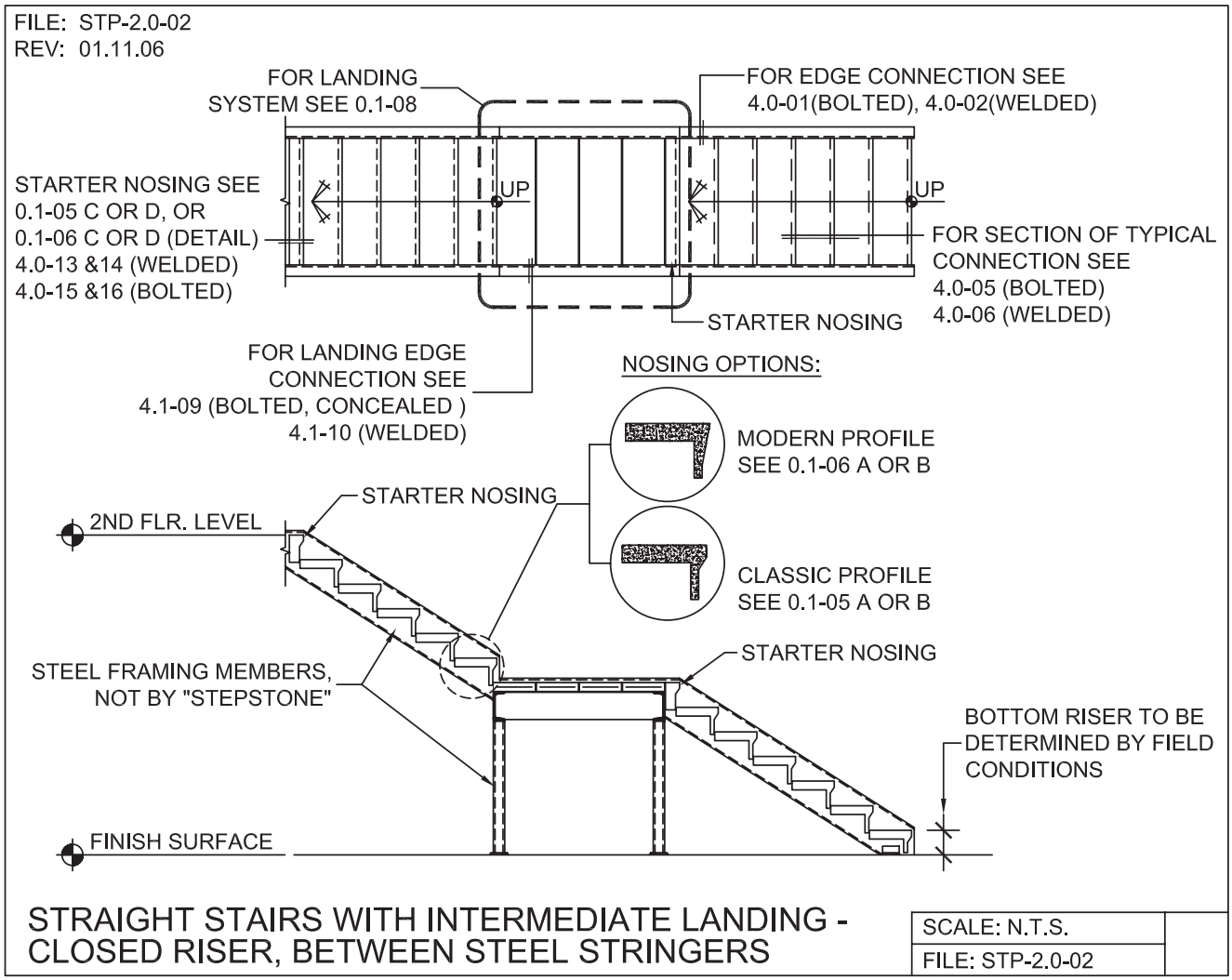

PRECAST CONCRETE TREADS, LANDINGS, AND BALCONIES SHOWN ON PLANS SHALL BE FROM THE "STEPTREAD" SYSTEM BY "STEPSTONE, INC." OF GARDENA, CA. FOR STEEL OR WOOD CONSTRUCTION. THE MANUFACTURER IS TO SUPPLY ALL PRECAST CONCRETE PARTS WITH EACH "STEPTREAD" AND FEATURING EITHER CAST IN THREADED INSERTS FOR BOLTING OR AN EMBEDDED BOTTOM WELD PLATE FOR WELDING. ALL REINFORCING AND CONNECTIONS WILL BE ZINC PLATED. ONLY ITEMS NOTED BY "STEPSTONE, INC." SHALL BE FURNISHED BY "STEPSTONE, INC." SUCH ITEMS SHALL BE INSTALLED BY OTHERS.

800.572.9029 Nationwide Distribution stepstoneinc.com
17025 SO. MAIN ST. GARDENA, CA 90248 | 310-327-7474
13238 SO. FIGUEROA ST. LOS ANGELES, CA 90061 | www.stepstoneinc.com

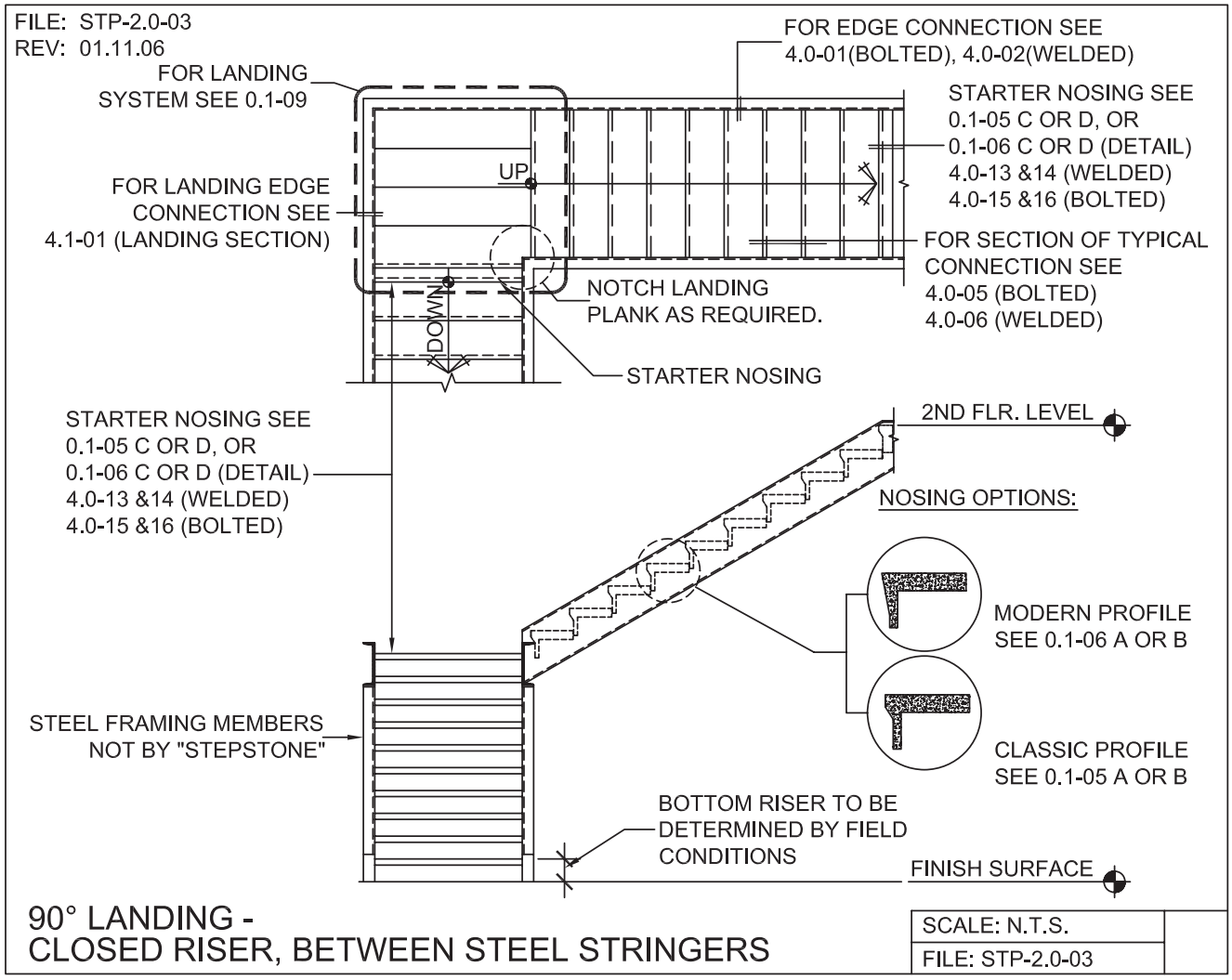

PRECAST CONCRETE TREADS, LANDINGS, AND BALCONIES SHOWN ON PLANS SHALL BE FROM THE "STEPTREAD" SYSTEM BY "STEPSTONE, INC." OF GARDENA, CA. FOR STEEL OR WOOD CONSTRUCTION. THE MANUFACTURER IS TO SUPPLY ALL PRECAST CONCRETE PARTS WITH EACH "STEPTREAD" AND FEATURING EITHER CAST IN THREADED INSERTS FOR BOLTING OR AN EMBEDDED BOTTOM WELD PLATE FOR WELDING. ALL REINFORCING AND CONNECTIONS WILL BE ZINC PLATED. ONLY ITEMS NOTED BY "STEPSTONE, INC." SHALL BE FURNISHED BY "STEPSTONE, INC." SUCH ITEMS SHALL BE INSTALLED BY OTHERS.

800.572.9029 Nationwide Distribution stepstoneinc.com
17025 SO. MAIN ST. GARDENA, CA 90248 | 310-327-7474
13238 SO. FIGUEROA ST. LOS ANGELES, CA 90061 | www.stepstoneinc.com

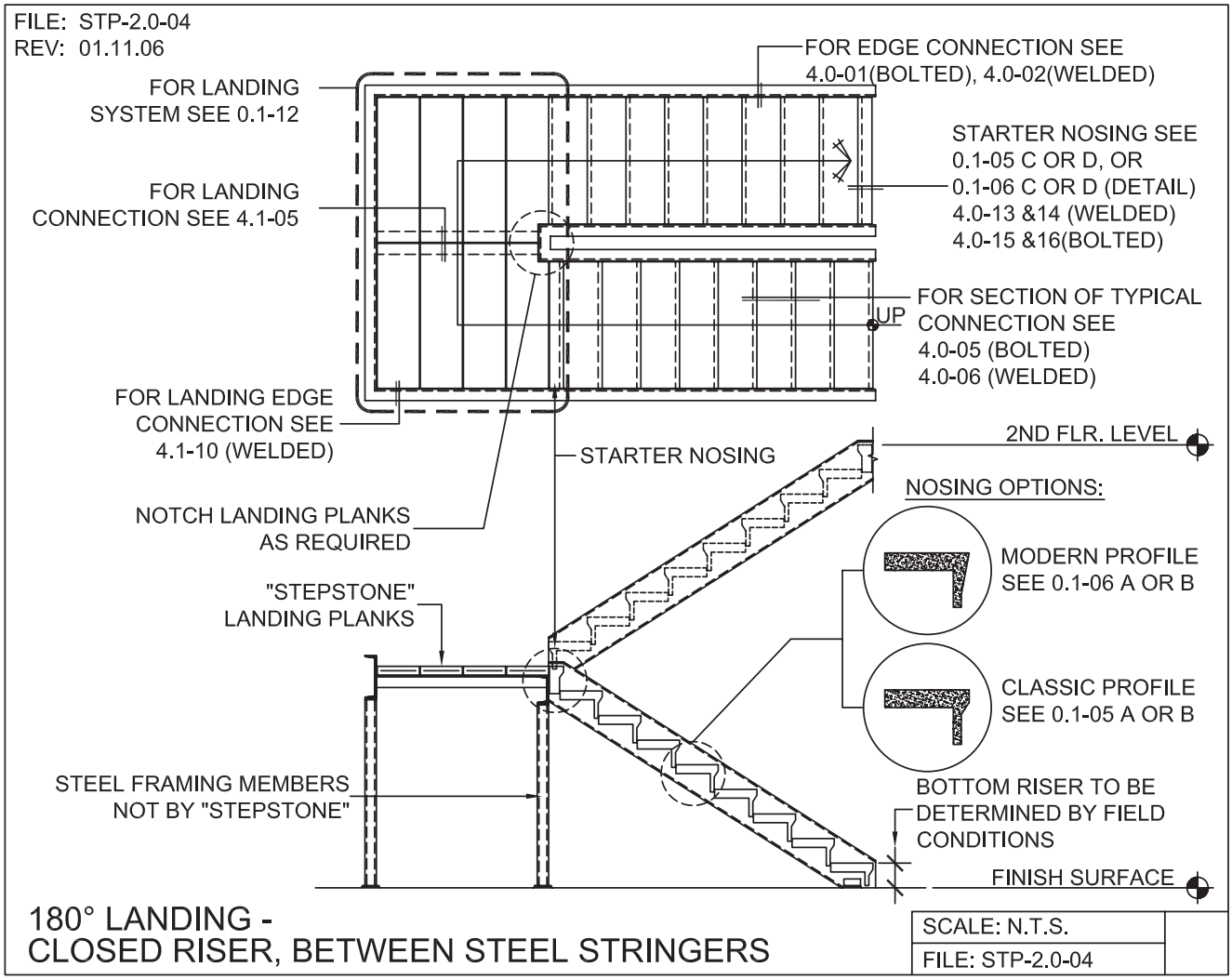

PRECAST CONCRETE TREADS, LANDINGS, AND BALCONIES SHOWN ON PLANS SHALL BE FROM THE "STEPTREAD" SYSTEM BY "STEPSTONE, INC." OF GARDENA, CA. FOR STEEL OR WOOD CONSTRUCTION. THE MANUFACTURER IS TO SUPPLY ALL PRECAST CONCRETE PARTS WITH EACH "STEPTREAD" AND FEATURING EITHER CAST IN THREADED INSERTS FOR BOLTING OR AN EMBEDDED BOTTOM WELD PLATE FOR WELDING. ALL REINFORCING AND CONNECTIONS WILL BE ZINC PLATED. ONLY ITEMS NOTED BY "STEPSTONE, INC." SHALL BE FURNISHED BY "STEPSTONE, INC." SUCH ITEMS SHALL BE INSTALLED BY OTHERS.

800.572.9029 Nationwide Distribution stepstoneinc.com
17025 SO. MAIN ST. GARDENA, CA 90248 | 310-327-7474
13238 SO. FIGUEROA ST. LOS ANGELES, CA 90061 | www.stepstoneinc.com

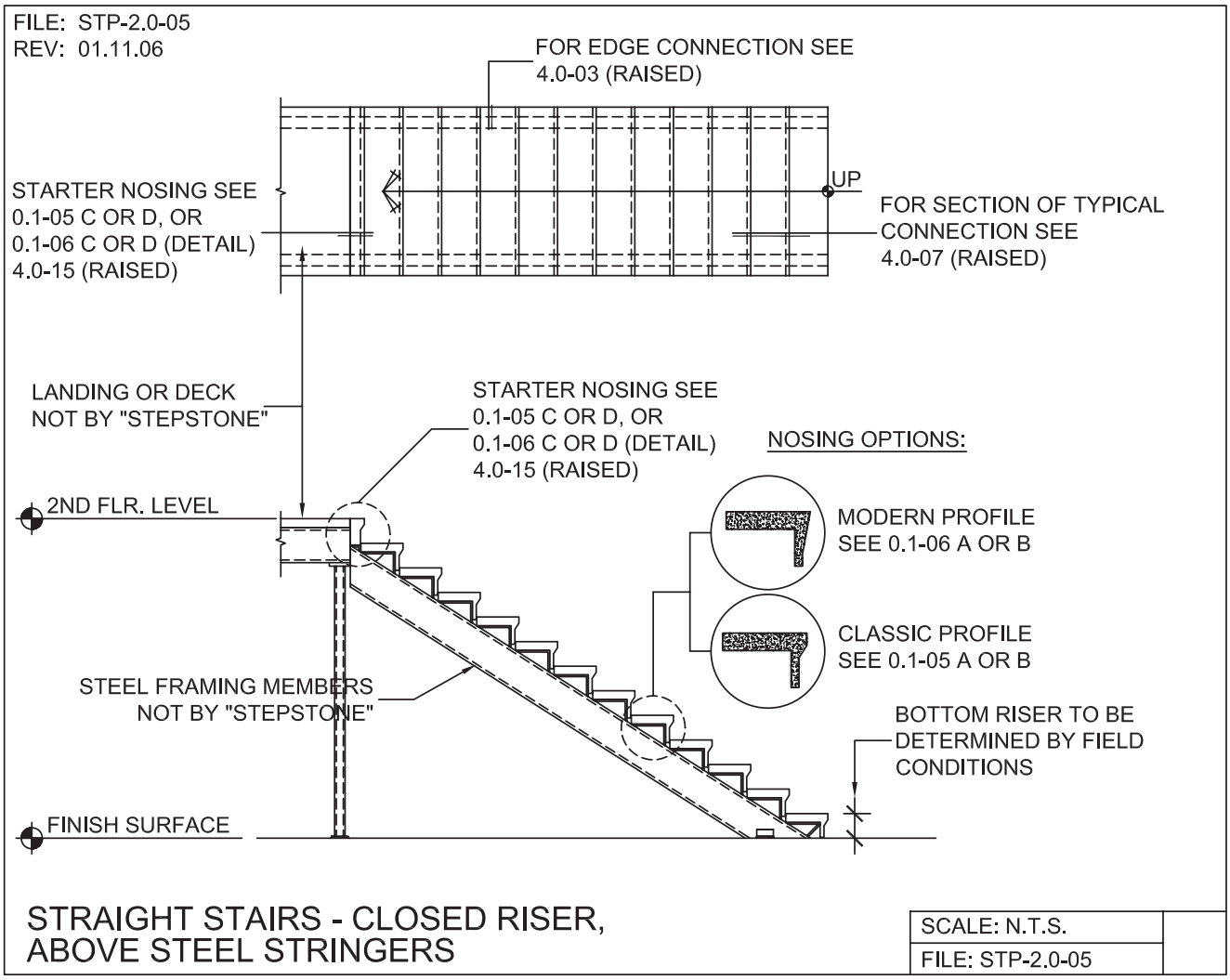

PRECAST CONCRETE TREADS, LANDINGS, AND BALCONIES SHOWN ON PLANS SHALL BE FROM THE "STEPTREAD" SYSTEM BY "STEPSTONE, INC." OF GARDENA, CA. FOR STEEL OR WOOD CONSTRUCTION. THE MANUFACTURER IS TO SUPPLY ALL PRECAST CONCRETE PARTS WITH EACH "STEPTREAD" AND FEATURING EITHER CAST IN THREADED INSERTS FOR BOLTING OR AN EMBEDDED BOTTOM WELD PLATE FOR WELDING. ALL REINFORCING AND CONNECTIONS WILL BE ZINC PLATED. ONLY ITEMS NOTED BY "STEPSTONE, INC." SHALL BE FURNISHED BY "STEPSTONE, INC." SUCH ITEMS SHALL BE INSTALLED BY OTHERS.

800.572.9029 Nationwide Distribution stepstoneinc.com
17025 SO. MAIN ST. GARDENA, CA 90248 | 310-327-7474
13238 SO. FIGUEROA ST. LOS ANGELES, CA 90061 | www.stepstoneinc.com

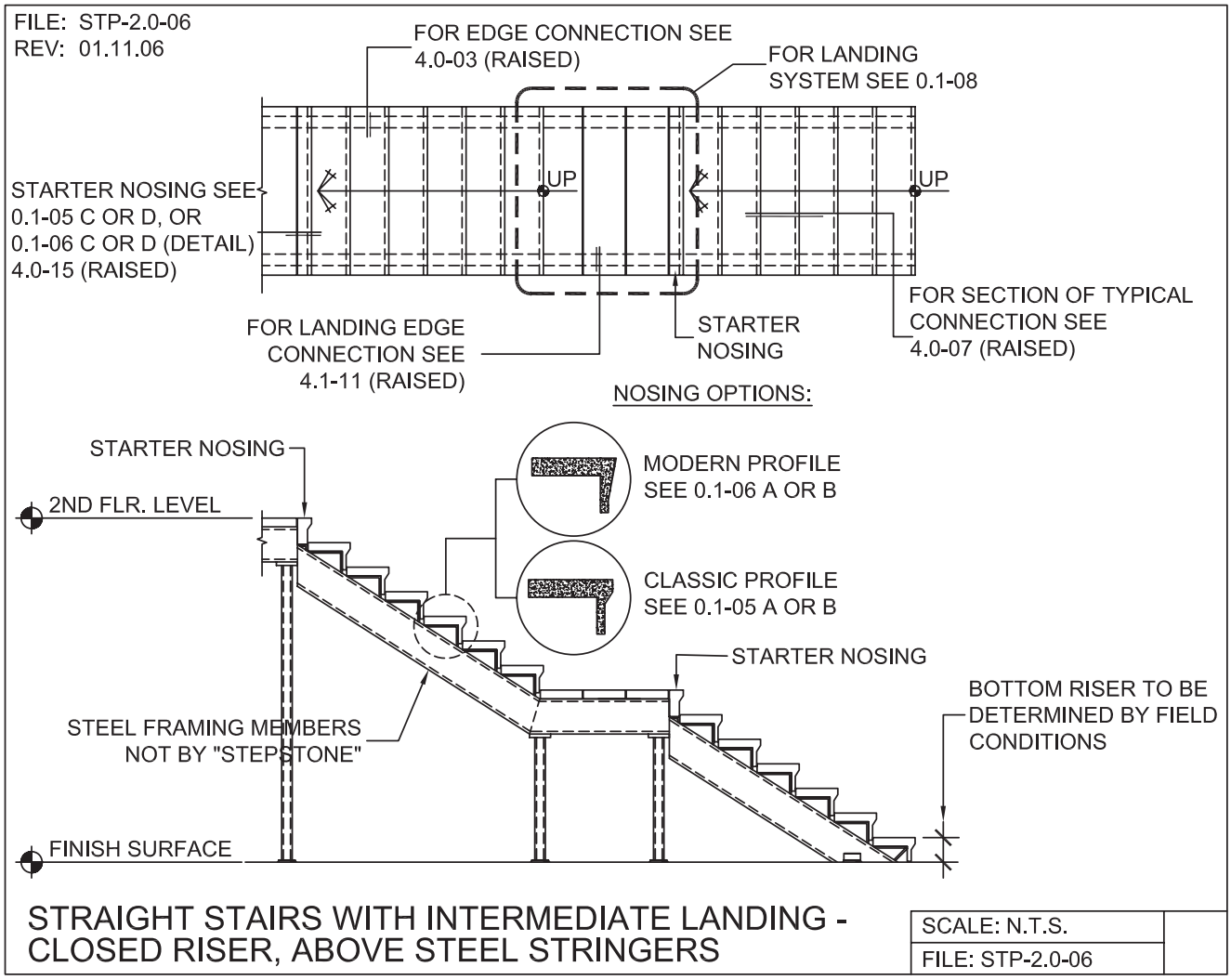

PRECAST CONCRETE TREADS, LANDINGS, AND BALCONIES SHOWN ON PLANS SHALL BE FROM THE "STEPTREAD" SYSTEM BY "STEPSTONE, INC." OF GARDENA, CA. FOR STEEL OR WOOD CONSTRUCTION. THE MANUFACTURER IS TO SUPPLY ALL PRECAST CONCRETE PARTS WITH EACH "STEPTREAD" AND FEATURING EITHER CAST IN THREADED INSERTS FOR BOLTING OR AN EMBEDDED BOTTOM WELD PLATE FOR WELDING. ALL REINFORCING AND CONNECTIONS WILL BE ZINC PLATED. ONLY ITEMS NOTED BY "STEPSTONE, INC." SHALL BE FURNISHED BY "STEPSTONE, INC." SUCH ITEMS SHALL BE INSTALLED BY OTHERS.

800.572.9029 Nationwide Distribution stepstoneinc.com
17025 SO. MAIN ST. GARDENA, CA 90248 | 310-327-7474
13238 SO. FIGUEROA ST. LOS ANGELES, CA 90061 | www.stepstoneinc.com

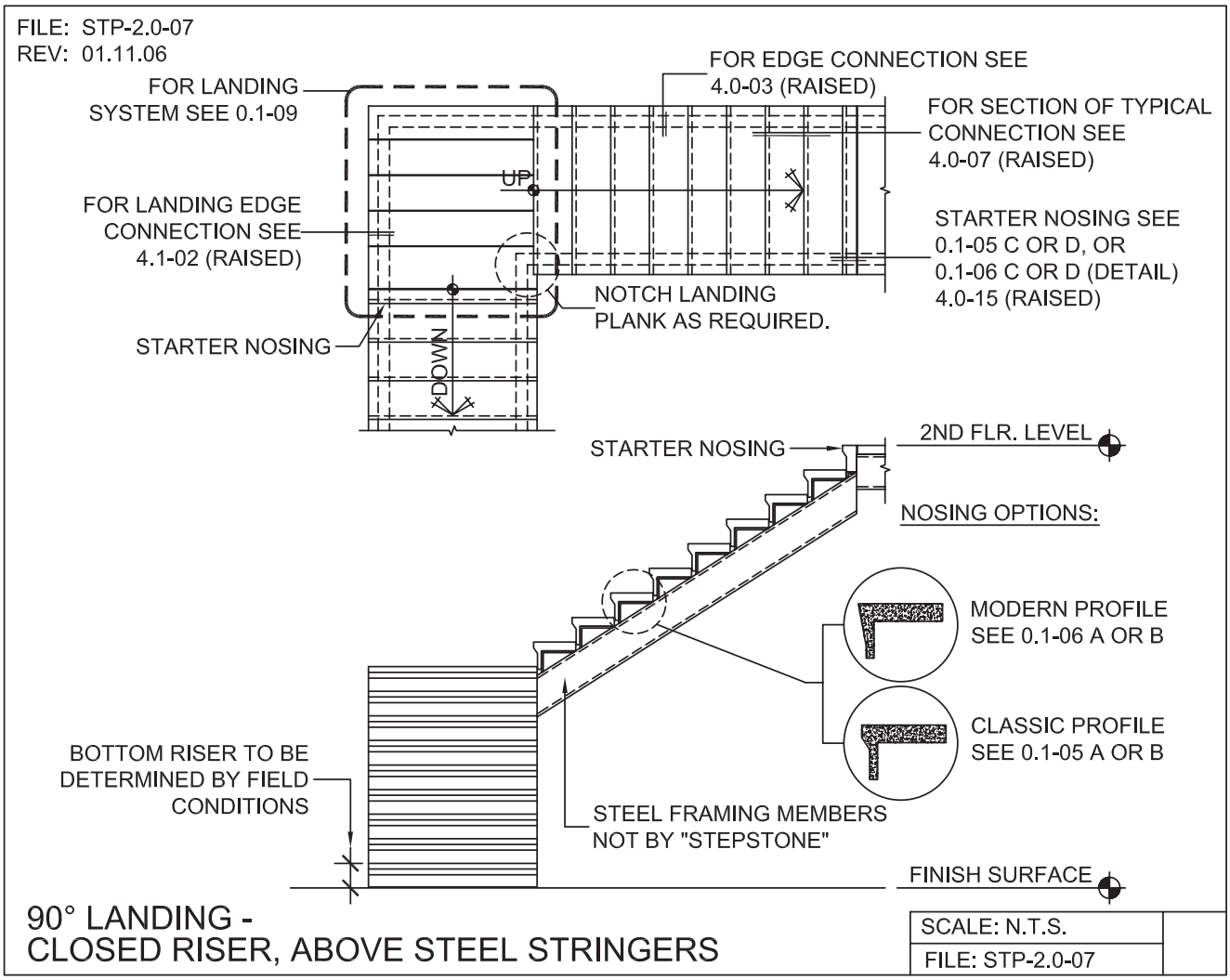

PRECAST CONCRETE TREADS, LANDINGS, AND BALCONIES SHOWN ON PLANS SHALL BE FROM THE "STEPTREAD" SYSTEM BY "STEPSTONE, INC." OF GARDENA, CA. FOR STEEL OR WOOD CONSTRUCTION. THE MANUFACTURER IS TO SUPPLY ALL PRECAST CONCRETE PARTS WITH EACH "STEPTREAD" AND FEATURING EITHER CAST IN THREADED INSERTS FOR BOLTING OR AN EMBEDDED BOTTOM WELD PLATE FOR WELDING. ALL REINFORCING AND CONNECTIONS WILL BE ZINC PLATED. ONLY ITEMS NOTED BY "STEPSTONE, INC." SHALL BE FURNISHED BY "STEPSTONE, INC." SUCH ITEMS SHALL BE INSTALLED BY OTHERS.

800.572.9029 Nationwide Distribution stepstoneinc.com
17025 SO. MAIN ST. GARDENA, CA 90248 | 310-327-7474
13238 SO. FIGUEROA ST. LOS ANGELES, CA 90061 | www.stepstoneinc.com

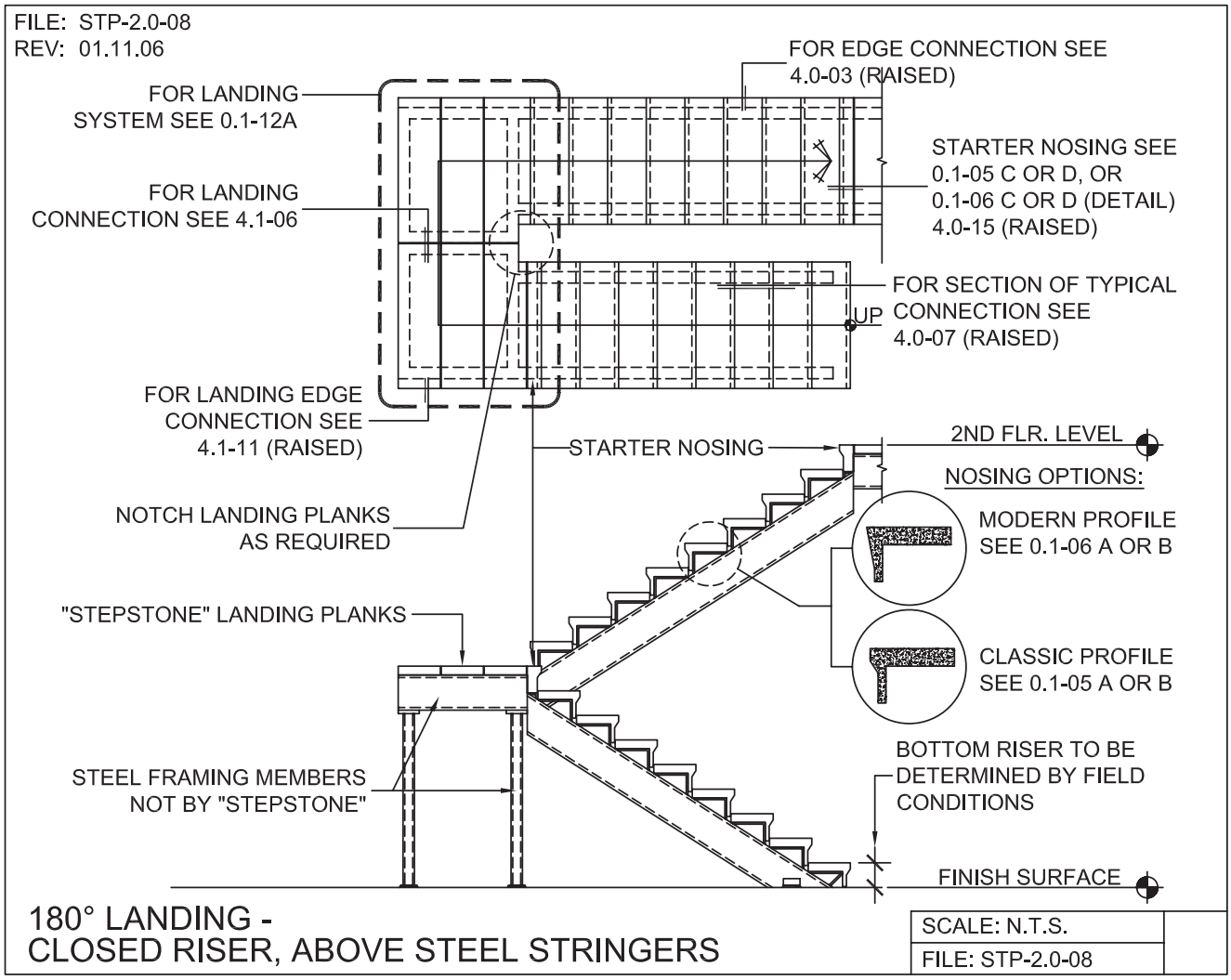

PRECAST CONCRETE TREADS, LANDINGS, AND BALCONIES SHOWN ON PLANS SHALL BE FROM THE "STEPTREAD" SYSTEM BY "STEPSTONE, INC." OF GARDENA, CA. FOR STEEL OR WOOD CONSTRUCTION. THE MANUFACTURER IS TO SUPPLY ALL PRECAST CONCRETE PARTS WITH EACH "STEPTREAD" AND FEATURING EITHER CAST IN THREADED INSERTS FOR BOLTING OR AN EMBEDDED BOTTOM WELD PLATE FOR WELDING. ALL REINFORCING AND CONNECTIONS WILL BE ZINC PLATED. ONLY ITEMS NOTED BY "STEPSTONE, INC." SHALL BE FURNISHED BY "STEPSTONE, INC." SUCH ITEMS SHALL BE INSTALLED BY OTHERS.

800.572.9029 Nationwide Distribution stepstoneinc.com
17025 SO. MAIN ST. GARDENA, CA 90248 | 310-327-7474
13238 SO. FIGUEROA ST. LOS ANGELES, CA 90061 | www.stepstoneinc.com

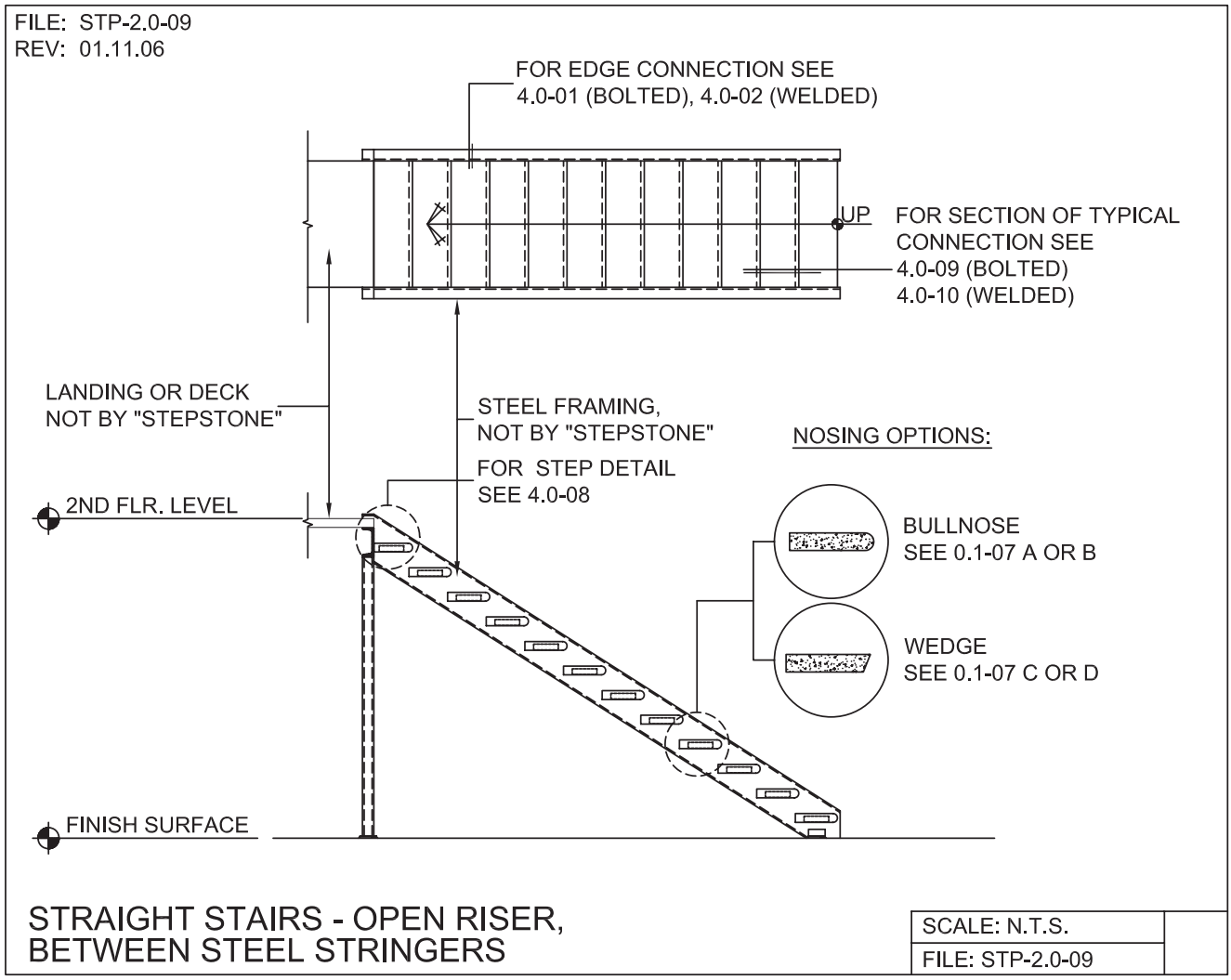

PRECAST CONCRETE TREADS, LANDINGS, AND BALCONIES SHOWN ON PLANS SHALL BE FROM THE "STEPTREAD" SYSTEM BY "STEPSTONE, INC." OF GARDENA, CA. FOR STEEL OR WOOD CONSTRUCTION. THE MANUFACTURER IS TO SUPPLY ALL PRECAST CONCRETE PARTS WITH EACH "STEPTREAD" AND FEATURING EITHER CAST IN THREADED INSERTS FOR BOLTING OR AN EMBEDDED BOTTOM WELD PLATE FOR WELDING. ALL REINFORCING AND CONNECTIONS WILL BE ZINC PLATED. ONLY ITEMS NOTED BY "STEPSTONE, INC." SHALL BE FURNISHED BY "STEPSTONE, INC." SUCH ITEMS SHALL BE INSTALLED BY OTHERS.

800.572.9029 Nationwide Distribution stepstoneinc.com
17025 SO. MAIN ST. GARDENA, CA 90248 | 310-327-7474
13238 SO. FIGUEROA ST. LOS ANGELES, CA 90061 | www.stepstoneinc.com

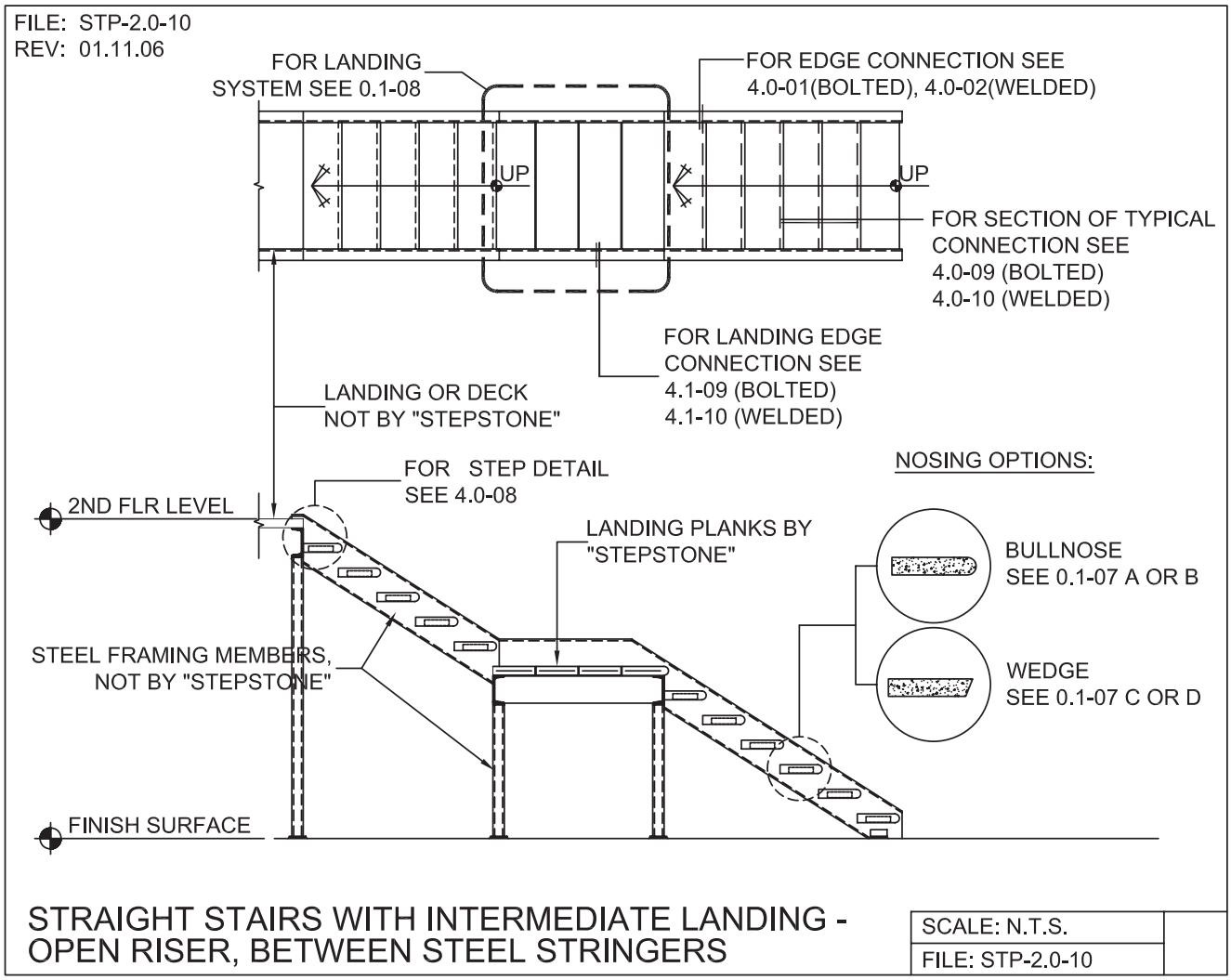

STRAIGHT STAIRS WITH INTERMEDIATE LANDING - OPEN RISER, BETWEEN STEEL STRINGERS

SCALE: N.T.S.	
FILE: STP-2.0-10	

PRECAST CONCRETE TREADS, LANDINGS, AND BALCONIES SHOWN ON PLANS SHALL BE FROM THE "STEPTREAD" SYSTEM BY "STEPSTONE, INC." OF GARDENA, CA. FOR STEEL OR WOOD CONSTRUCTION. THE MANUFACTURER IS TO SUPPLY ALL PRECAST CONCRETE PARTS WITH EACH "STEPTREAD" AND FEATURING EITHER CAST IN THREADED INSERTS FOR BOLTING OR AN EMBEDDED BOTTOM WELD PLATE FOR WELDING. ALL REINFORCING AND CONNECTIONS WILL BE ZINC PLATED. ONLY ITEMS NOTED BY "STEPSTONE, INC." SHALL BE FURNISHED BY "STEPSTONE, INC." SUCH ITEMS SHALL BE INSTALLED BY OTHERS.

800.572.9029 Nationwide Distribution stepstoneinc.com
17025 SO. MAIN ST. GARDENA, CA 90248 | 310-327-7474
13238 SO. FIGUEROA ST. LOS ANGELES, CA 90061 | www.stepstoneinc.com

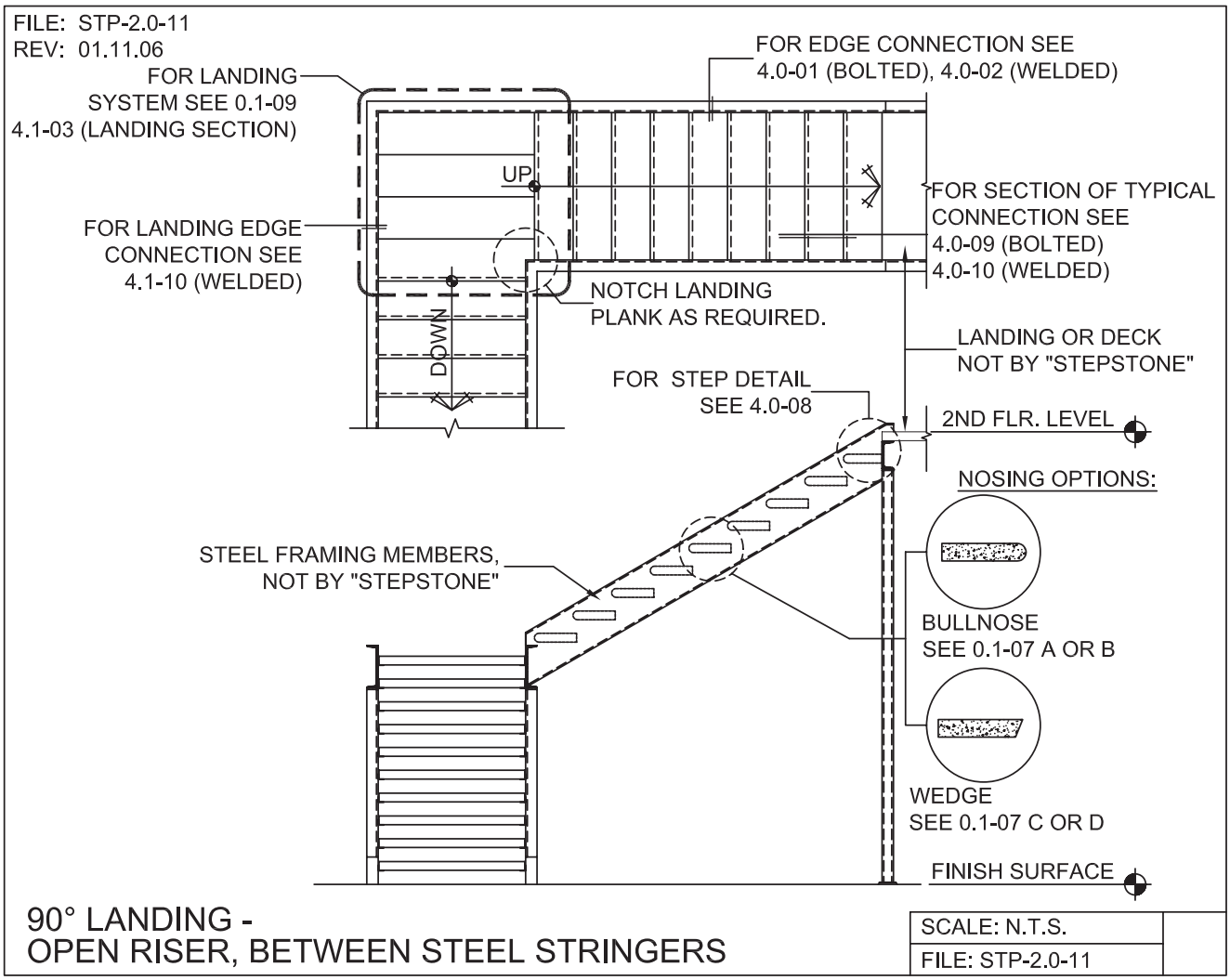

PRECAST CONCRETE TREADS, LANDINGS, AND BALCONIES SHOWN ON PLANS SHALL BE FROM THE "STEPTREAD" SYSTEM BY "STEPSTONE, INC." OF GARDENA, CA. FOR STEEL OR WOOD CONSTRUCTION. THE MANUFACTURER IS TO SUPPLY ALL PRECAST CONCRETE PARTS WITH EACH "STEPTREAD" AND FEATURING EITHER CAST IN THREADED INSERTS FOR BOLTING OR AN EMBEDDED BOTTOM WELD PLATE FOR WELDING. ALL REINFORCING AND CONNECTIONS WILL BE ZINC PLATED. ONLY ITEMS NOTED BY "STEPSTONE, INC." SHALL BE FURNISHED BY "STEPSTONE, INC." SUCH ITEMS SHALL BE INSTALLED BY OTHERS.

800.572.9029 Nationwide Distribution stepstoneinc.com
17025 SO. MAIN ST. GARDENA, CA 90248 | 310-327-7474
13238 SO. FIGUEROA ST. LOS ANGELES, CA 90061 | www.stepstoneinc.com

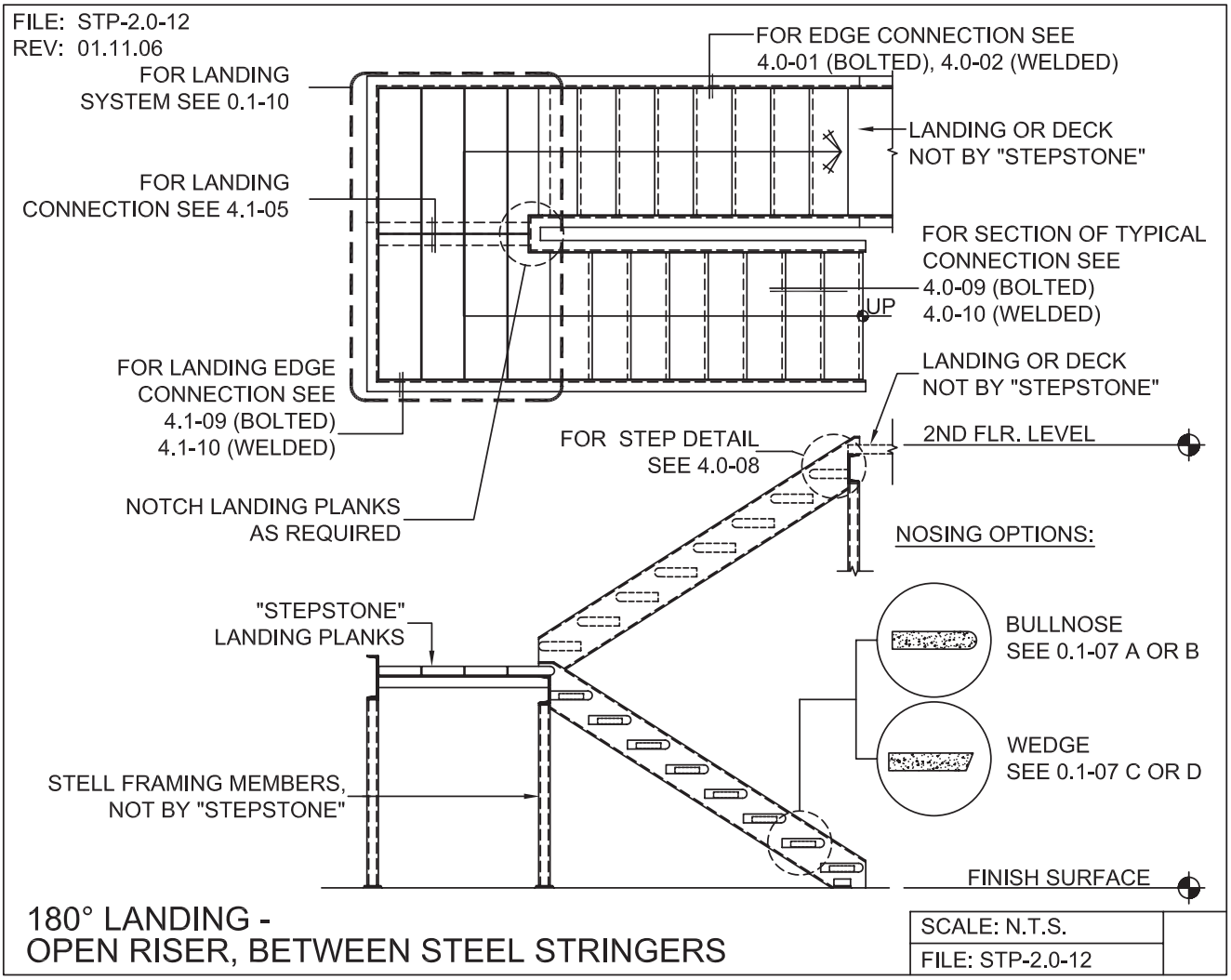

PRECAST CONCRETE TREADS, LANDINGS, AND BALCONIES SHOWN ON PLANS SHALL BE FROM THE "STEPTREAD" SYSTEM BY "STEPSTONE, INC." OF GARDENA, CA. FOR STEEL OR WOOD CONSTRUCTION. THE MANUFACTURER IS TO SUPPLY ALL PRECAST CONCRETE PARTS WITH EACH "STEPTREAD" AND FEATURING EITHER CAST IN THREADED INSERTS FOR BOLTING OR AN EMBEDDED BOTTOM WELD PLATE FOR WELDING. ALL REINFORCING AND CONNECTIONS WILL BE ZINC PLATED. ONLY ITEMS NOTED BY "STEPSTONE, INC." SHALL BE FURNISHED BY "STEPSTONE, INC." SUCH ITEMS SHALL BE INSTALLED BY OTHERS.

800.572.9029 Nationwide Distribution stepstoneinc.com
17025 SO. MAIN ST. GARDENA, CA 90248 | 310-327-7474
13238 SO. FIGUEROA ST. LOS ANGELES, CA 90061 | www.stepstoneinc.com

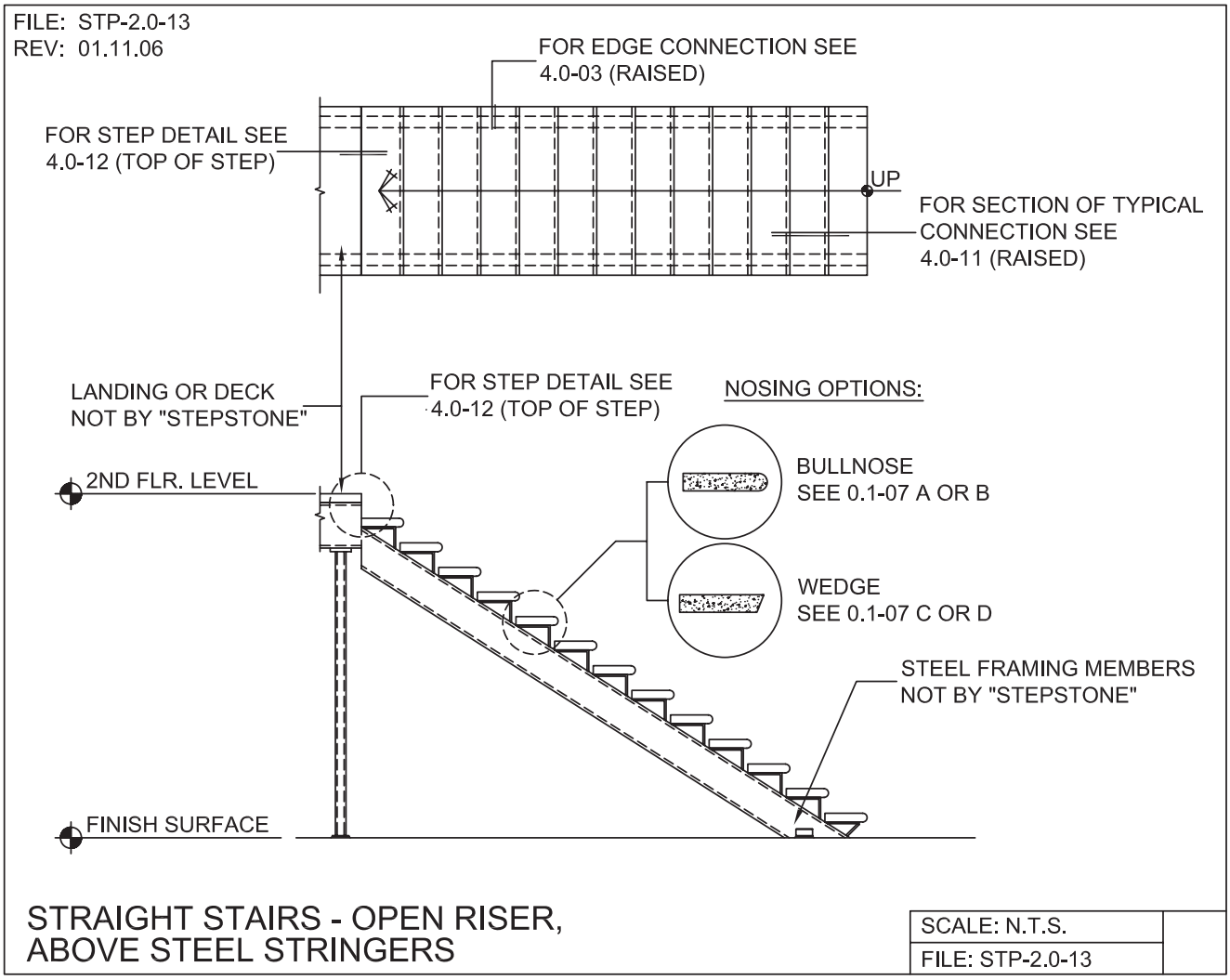

PRECAST CONCRETE TREADS, LANDINGS, AND BALCONIES SHOWN ON PLANS SHALL BE FROM THE "STEPTREAD" SYSTEM BY "STEPSTONE, INC." OF GARDENA, CA. FOR STEEL OR WOOD CONSTRUCTION. THE MANUFACTURER IS TO SUPPLY ALL PRECAST CONCRETE PARTS WITH EACH "STEPTREAD" AND FEATURING EITHER CAST IN THREADED INSERTS FOR BOLTING OR AN EMBEDDED BOTTOM WELD PLATE FOR WELDING. ALL REINFORCING AND CONNECTIONS WILL BE ZINC PLATED. ONLY ITEMS NOTED BY "STEPSTONE, INC." SHALL BE FURNISHED BY "STEPSTONE, INC." SUCH ITEMS SHALL BE INSTALLED BY OTHERS.

800.572.9029 Nationwide Distribution stepstoneinc.com
17025 SO. MAIN ST. GARDENA, CA 90248 | 310-327-7474
13238 SO. FIGUEROA ST. LOS ANGELES, CA 90061 | www.stepstoneinc.com

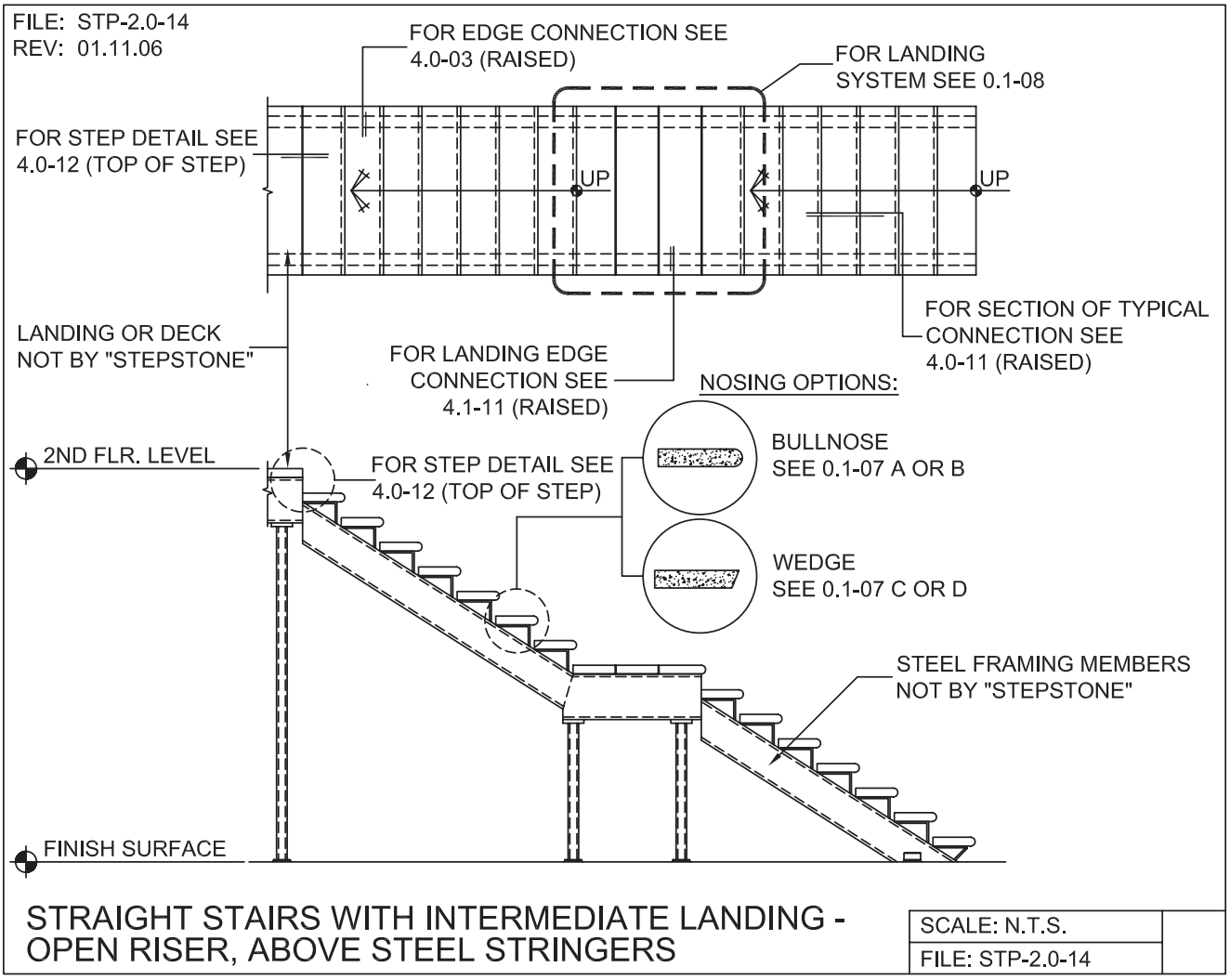

STRAIGHT STAIRS WITH INTERMEDIATE LANDING - OPEN RISER, ABOVE STEEL STRINGERS

SCALE: N.T.S.
FILE: STP-2.0-14

PRECAST CONCRETE TREADS, LANDINGS, AND BALCONIES SHOWN ON PLANS SHALL BE FROM THE "STEPTREAD" SYSTEM BY "STEPSTONE, INC." OF GARDENA, CA. FOR STEEL OR WOOD CONSTRUCTION. THE MANUFACTURER IS TO SUPPLY ALL PRECAST CONCRETE PARTS WITH EACH "STEPTREAD" AND FEATURING EITHER CAST IN THREADED INSERTS FOR BOLTING OR AN EMBEDDED BOTTOM WELD PLATE FOR WELDING. ALL REINFORCING AND CONNECTIONS WILL BE ZINC PLATED. ONLY ITEMS NOTED BY "STEPSTONE, INC." SHALL BE FURNISHED BY "STEPSTONE, INC." SUCH ITEMS SHALL BE INSTALLED BY OTHERS.

800.572.9029 Nationwide Distribution stepstoneinc.com
17025 SO. MAIN ST. GARDENA, CA 90248 | 310-327-7474
13238 SO. FIGUEROA ST. LOS ANGELES, CA 90061 | www.stepstoneinc.com

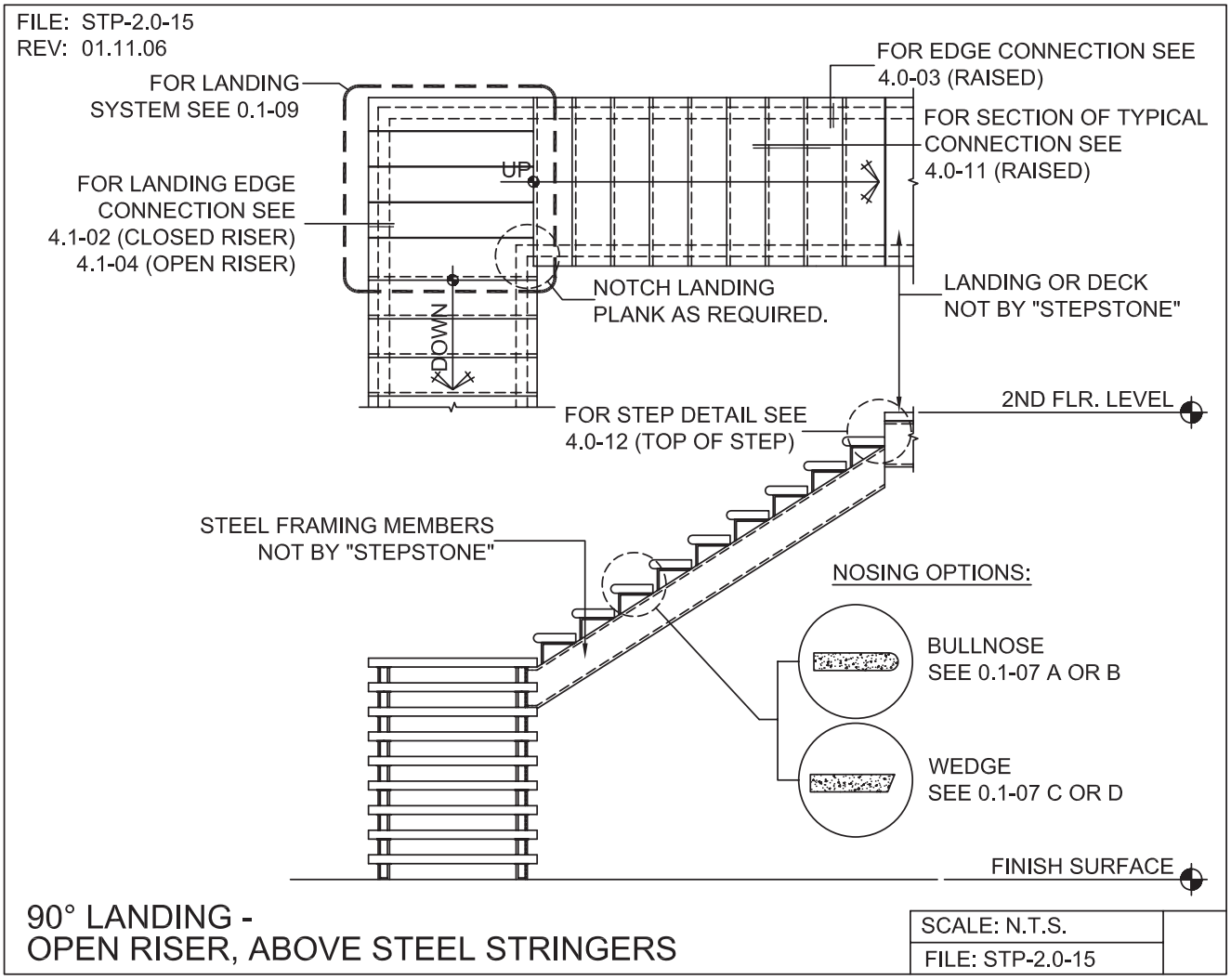

PRECAST CONCRETE TREADS, LANDINGS, AND BALCONIES SHOWN ON PLANS SHALL BE FROM THE "STEPTREAD" SYSTEM BY "STEPSTONE, INC." OF GARDENA, CA. FOR STEEL OR WOOD CONSTRUCTION. THE MANUFACTURER IS TO SUPPLY ALL PRECAST CONCRETE PARTS WITH EACH "STEPTREAD" AND FEATURING EITHER CAST IN THREADED INSERTS FOR BOLTING OR AN EMBEDDED BOTTOM WELD PLATE FOR WELDING. ALL REINFORCING AND CONNECTIONS WILL BE ZINC PLATED. ONLY ITEMS NOTED BY "STEPSTONE, INC." SHALL BE FURNISHED BY "STEPSTONE, INC." SUCH ITEMS SHALL BE INSTALLED BY OTHERS.

800.572.9029 Nationwide Distribution stepstoneinc.com
17025 SO. MAIN ST. GARDENA, CA 90248 | 310-327-7474
13238 SO. FIGUEROA ST. LOS ANGELES, CA 90061 | www.stepstoneinc.com

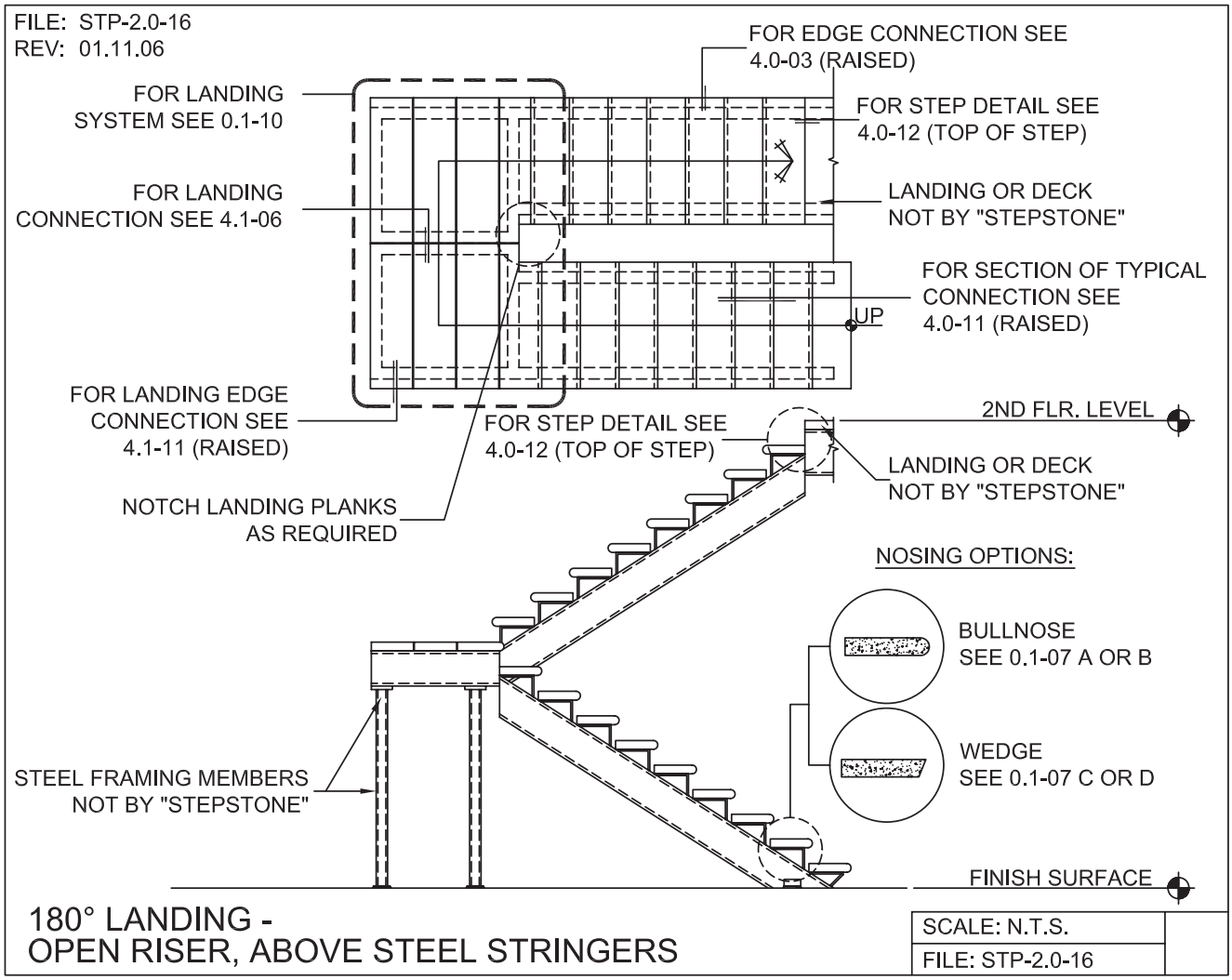

PRECAST CONCRETE TREADS, LANDINGS, AND BALCONIES SHOWN ON PLANS SHALL BE FROM THE "STEPTREAD" SYSTEM BY "STEPSTONE, INC." OF GARDENA, CA. FOR STEEL OR WOOD CONSTRUCTION. THE MANUFACTURER IS TO SUPPLY ALL PRECAST CONCRETE PARTS WITH EACH "STEPTREAD" AND FEATURING EITHER CAST IN THREADED INSERTS FOR BOLTING OR AN EMBEDDED BOTTOM WELD PLATE FOR WELDING. ALL REINFORCING AND CONNECTIONS WILL BE ZINC PLATED. ONLY ITEMS NOTED BY "STEPSTONE, INC." SHALL BE FURNISHED BY "STEPSTONE, INC." SUCH ITEMS SHALL BE INSTALLED BY OTHERS.

800.572.9029 Nationwide Distribution stepstoneinc.com
17025 SO. MAIN ST. GARDENA, CA 90248 | 310-327-7474
13238 SO. FIGUEROA ST. LOS ANGELES, CA 90061 | www.stepstoneinc.com

FILE: STP-4.0-01
REV: 01.11.06

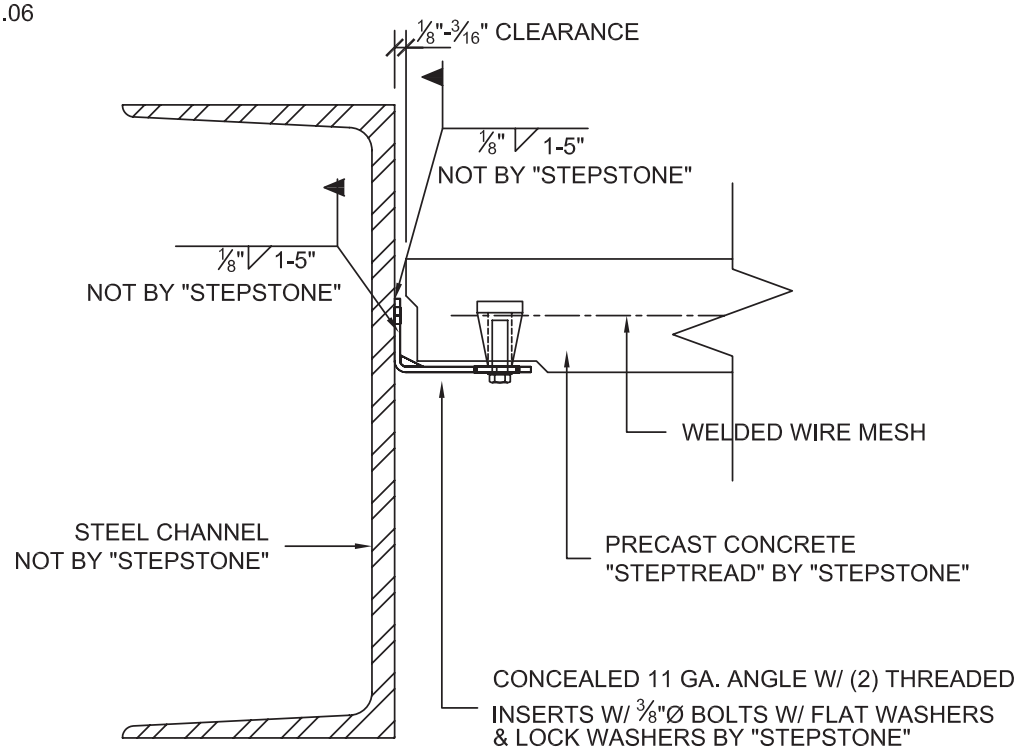

STAIR END DETAIL - BOLTED

SCALE: N.T.S.	
FILE: STP-4.0-01	

PRECAST CONCRETE TREADS, LANDINGS, AND BALCONIES SHOWN ON PLANS SHALL BE FROM THE "STEPTREAD" SYSTEM BY "STEPSTONE, INC." OF GARDENA, CA. FOR STEEL OR WOOD CONSTRUCTION. THE MANUFACTURER IS TO SUPPLY ALL PRECAST CONCRETE PARTS WITH EACH "STEPTREAD" AND FEATURING EITHER CAST IN THREADED INSERTS FOR BOLTING OR AN EMBEDDED BOTTOM WELD PLATE FOR WELDING. ALL REINFORCING AND CONNECTIONS WILL BE ZINC PLATED. ONLY ITEMS NOTED BY "STEPSTONE, INC." SHALL BE FURNISHED BY "STEPSTONE, INC." SUCH ITEMS SHALL BE INSTALLED BY OTHERS.

800.572.9029 Nationwide Distribution stepstoneinc.com
17025 SO. MAIN ST. GARDENA, CA 90248 | 310-327-7474
13238 SO. FIGUEROA ST. LOS ANGELES, CA 90061 | www.stepstoneinc.com

FILE: STP-4.0-02
REV: 01.11.06

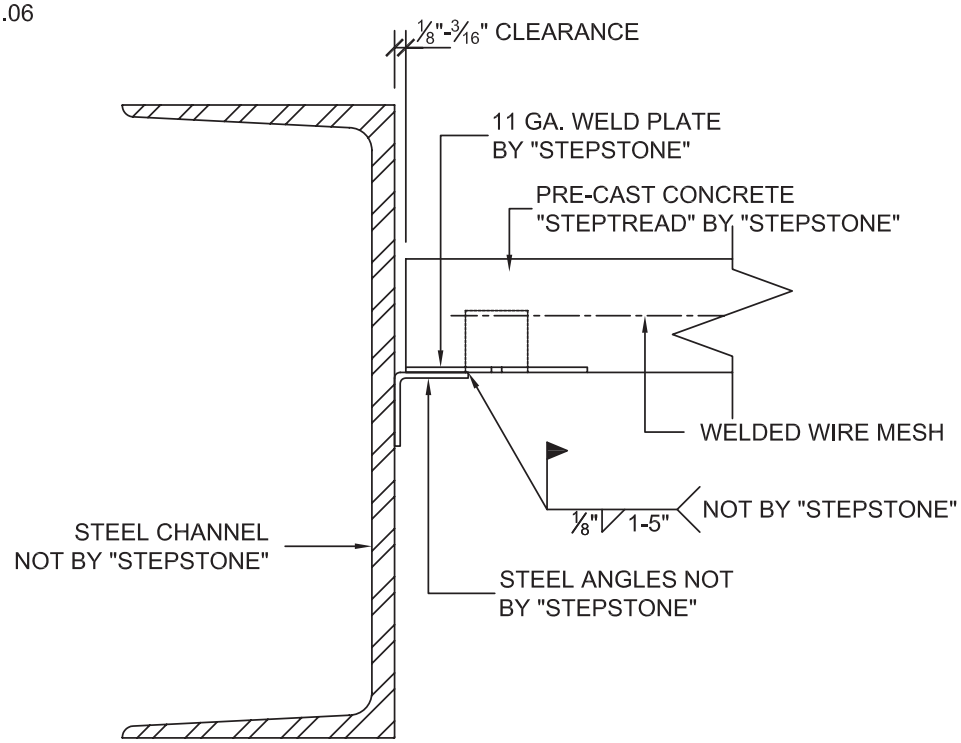

STAIR END DETAIL - WELDED

SCALE: N.T.S.	
FILE: STP-4.0-02	

PRECAST CONCRETE TREADS, LANDINGS, AND BALCONIES SHOWN ON PLANS SHALL BE FROM THE "STEPTREAD" SYSTEM BY "STEPSTONE, INC." OF GARDENA, CA. FOR STEEL OR WOOD CONSTRUCTION. THE MANUFACTURER IS TO SUPPLY ALL PRECAST CONCRETE PARTS WITH EACH "STEPTREAD" AND FEATURING EITHER CAST IN THREADED INSERTS FOR BOLTING OR AN EMBEDDED BOTTOM WELD PLATE FOR WELDING. ALL REINFORCING AND CONNECTIONS WILL BE ZINC PLATED. ONLY ITEMS NOTED BY "STEPSTONE, INC." SHALL BE FURNISHED BY "STEPSTONE, INC." SUCH ITEMS SHALL BE INSTALLED BY OTHERS.

800.572.9029 Nationwide Distribution stepstoneinc.com
17025 SO. MAIN ST. GARDENA, CA 90248 | 310-327-7474
13238 SO. FIGUEROA ST. LOS ANGELES, CA 90061 | www.stepstoneinc.com

FILE: STP-4.0-03
REV: 01.11.06

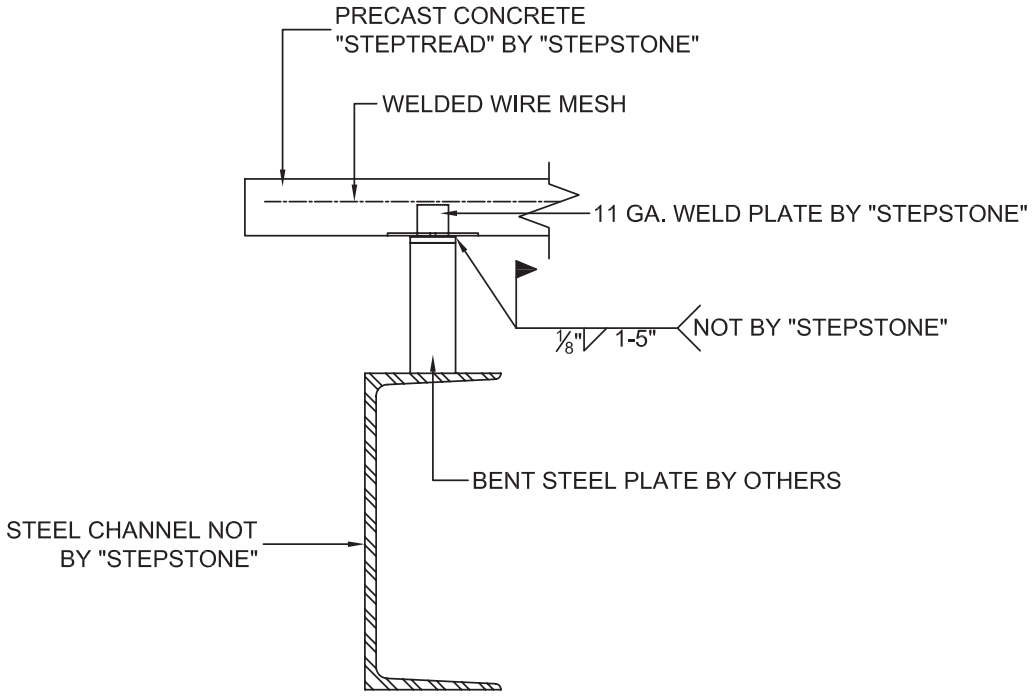

STAIR END DETAIL - RISER ABOVE STEEL STRINGERS

SCALE: N.T.S.	
FILE: STP-4.0-03	

PRECAST CONCRETE TREADS, LANDINGS, AND BALCONIES SHOWN ON PLANS SHALL BE FROM THE "STEPTREAD" SYSTEM BY "STEPSTONE, INC." OF GARDENA, CA. FOR STEEL OR WOOD CONSTRUCTION. THE MANUFACTURER IS TO SUPPLY ALL PRECAST CONCRETE PARTS WITH EACH "STEPTREAD" AND FEATURING EITHER CAST IN THREADED INSERTS FOR BOLTING OR AN EMBEDDED BOTTOM WELD PLATE FOR WELDING. ALL REINFORCING AND CONNECTIONS WILL BE ZINC PLATED. ONLY ITEMS NOTED BY "STEPSTONE, INC." SHALL BE FURNISHED BY "STEPSTONE, INC." SUCH ITEMS SHALL BE INSTALLED BY OTHERS.

800.572.9029 Nationwide Distribution stepstoneinc.com
17025 SO. MAIN ST. GARDENA, CA 90248 | 310-327-7474
13238 SO. FIGUEROA ST. LOS ANGELES, CA 90061 | www.stepstoneinc.com

FILE: STP-4.0-04
REV: 07.16.13

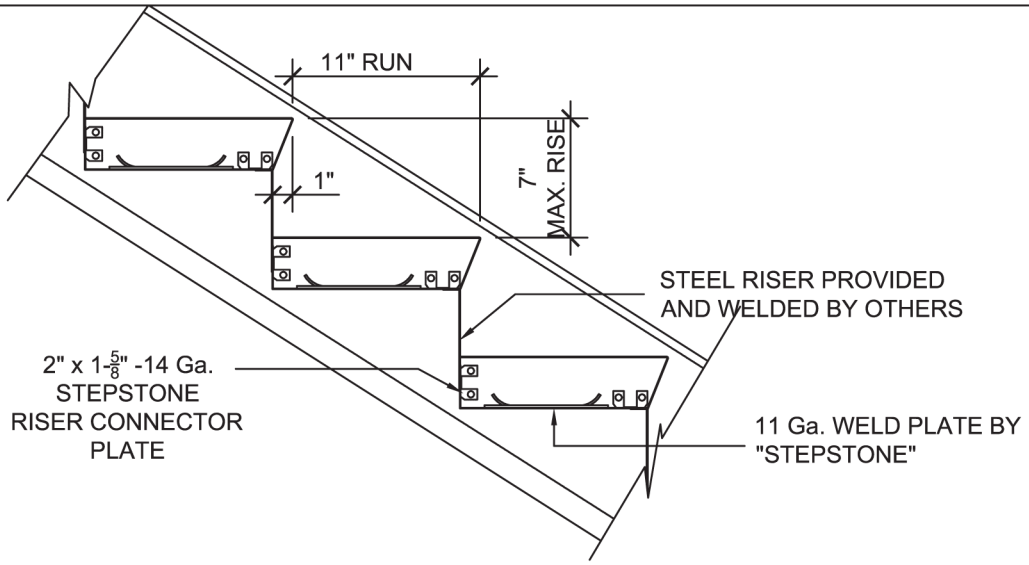

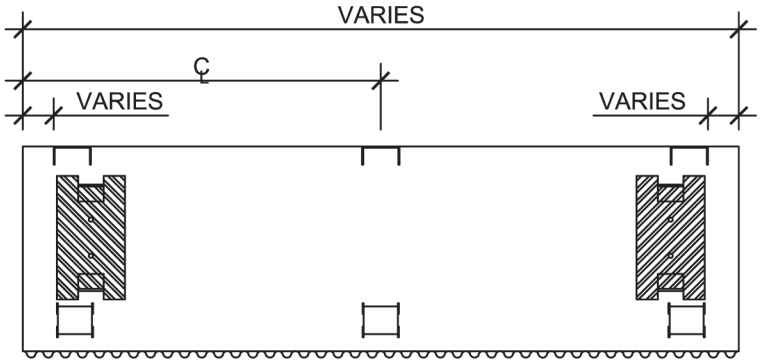

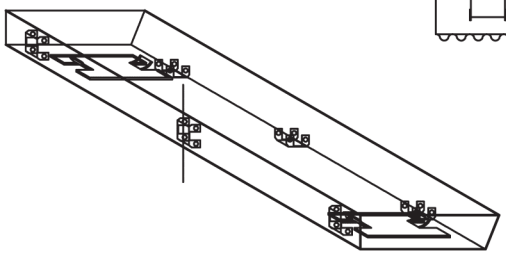

BOTTOM

WEDGE PROFILE - WELD ON WITH RISER CONNECTOR PLATES

SCALE: N.T.S.	
FILE: STP-4.0-04	

PRECAST CONCRETE TREADS, LANDINGS, AND BALCONIES SHOWN ON PLANS SHALL BE FROM THE "STEPTREAD" SYSTEM BY "STEPSTONE, INC." OF GARDENA, CA. FOR STEEL OR WOOD CONSTRUCTION. THE MANUFACTURER IS TO SUPPLY ALL PRECAST CONCRETE PARTS WITH EACH "STEPTREAD" AND FEATURING EITHER CAST IN THREADED INSERTS FOR BOLTING OR AN EMBEDDED BOTTOM WELD PLATE FOR WELDING. ALL REINFORCING AND CONNECTIONS WILL BE ZINC PLATED. ONLY ITEMS NOTED BY "STEPSTONE, INC." SHALL BE FURNISHED BY "STEPSTONE, INC." SUCH ITEMS SHALL BE INSTALLED BY OTHERS.

800.572.9029 Nationwide Distribution stepstoneinc.com
17025 SO. MAIN ST. GARDENA, CA 90248 | 310-327-7474
13238 SO. FIGUEROA ST. LOS ANGELES, CA 90061 | www.stepstoneinc.com

FILE: STP-4.0-05
REV: 01.11.06

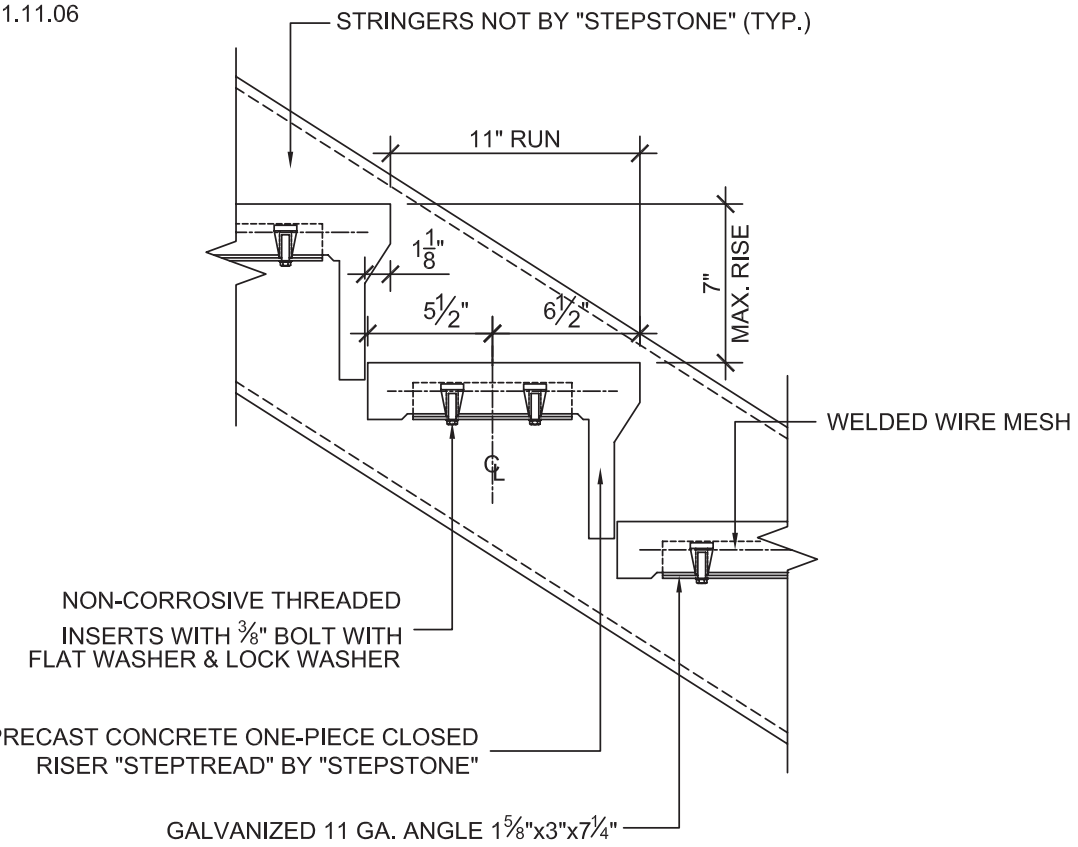

CLOSED RISER SECTION - BOLT ON, BETWEEN STEEL STRINGERS, CONCEALED ANGLE

SCALE: N.T.S.	
FILE: STP-4.0-05	

PRECAST CONCRETE TREADS, LANDINGS, AND BALCONIES SHOWN ON PLANS SHALL BE FROM THE "STEPTREAD" SYSTEM BY "STEPSTONE, INC." OF GARDENA, CA. FOR STEEL OR WOOD CONSTRUCTION. THE MANUFACTURER IS TO SUPPLY ALL PRECAST CONCRETE PARTS WITH EACH "STEPTREAD" AND FEATURING EITHER CAST IN THREADED INSERTS FOR BOLTING OR AN EMBEDDED BOTTOM WELD PLATE FOR WELDING. ALL REINFORCING AND CONNECTIONS WILL BE ZINC PLATED. ONLY ITEMS NOTED BY "STEPSTONE, INC." SHALL BE FURNISHED BY "STEPSTONE, INC." SUCH ITEMS SHALL BE INSTALLED BY OTHERS.

800.572.9029 Nationwide Distribution stepstoneinc.com
17025 SO. MAIN ST. GARDENA, CA 90248 | 310-327-7474
13238 SO. FIGUEROA ST. LOS ANGELES, CA 90061 | www.stepstoneinc.com

FILE: STP-4.0-06
REV: 01.11.06

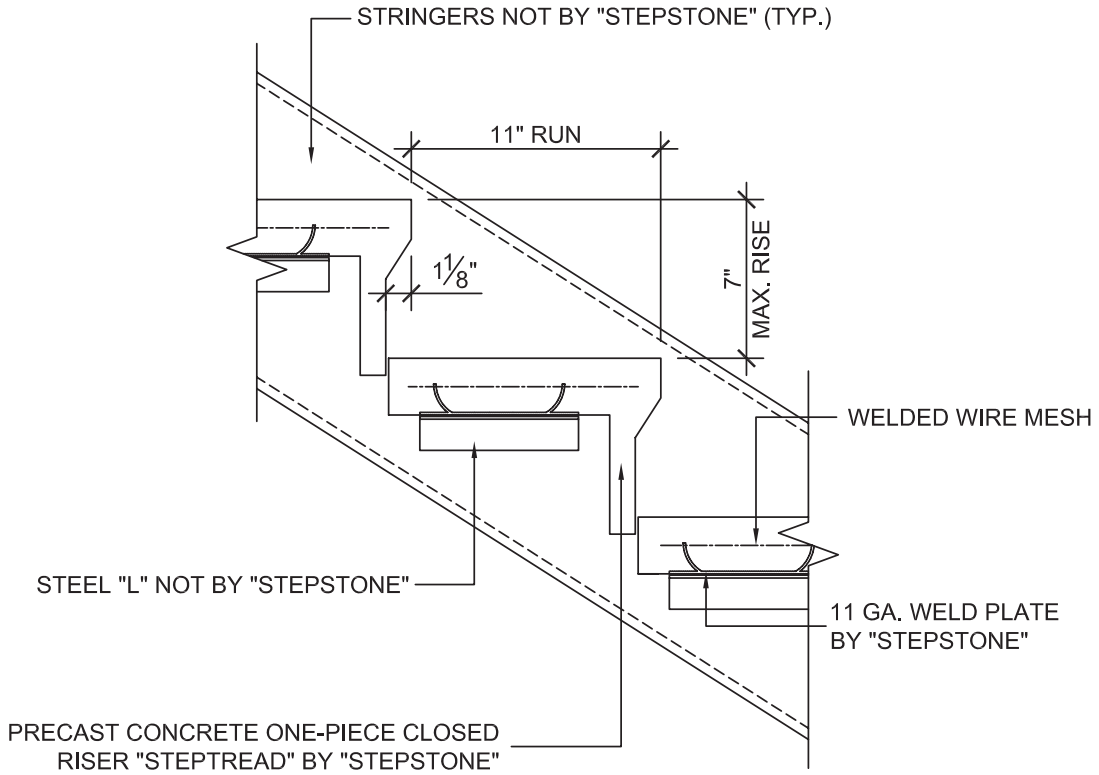

CLOSED RISER SECTION - BETWEEN STEEL STRINGERS, WELDED

SCALE: N.T.S.	
FILE: STP-4.0-06	

PRECAST CONCRETE TREADS, LANDINGS, AND BALCONIES SHOWN ON PLANS SHALL BE FROM THE "STEPTREAD" SYSTEM BY "STEPSTONE, INC." OF GARDENA, CA. FOR STEEL OR WOOD CONSTRUCTION. THE MANUFACTURER IS TO SUPPLY ALL PRECAST CONCRETE PARTS WITH EACH "STEPTREAD" AND FEATURING EITHER CAST IN THREADED INSERTS FOR BOLTING OR AN EMBEDDED BOTTOM WELD PLATE FOR WELDING. ALL REINFORCING AND CONNECTIONS WILL BE ZINC PLATED. ONLY ITEMS NOTED BY "STEPSTONE, INC." SHALL BE FURNISHED BY "STEPSTONE, INC." SUCH ITEMS SHALL BE INSTALLED BY OTHERS.

800.572.9029 Nationwide Distribution stepstoneinc.com
17025 SO. MAIN ST. GARDENA, CA 90248 | 310-327-7474
13238 SO. FIGUEROA ST. LOS ANGELES, CA 90061 | www.stepstoneinc.com

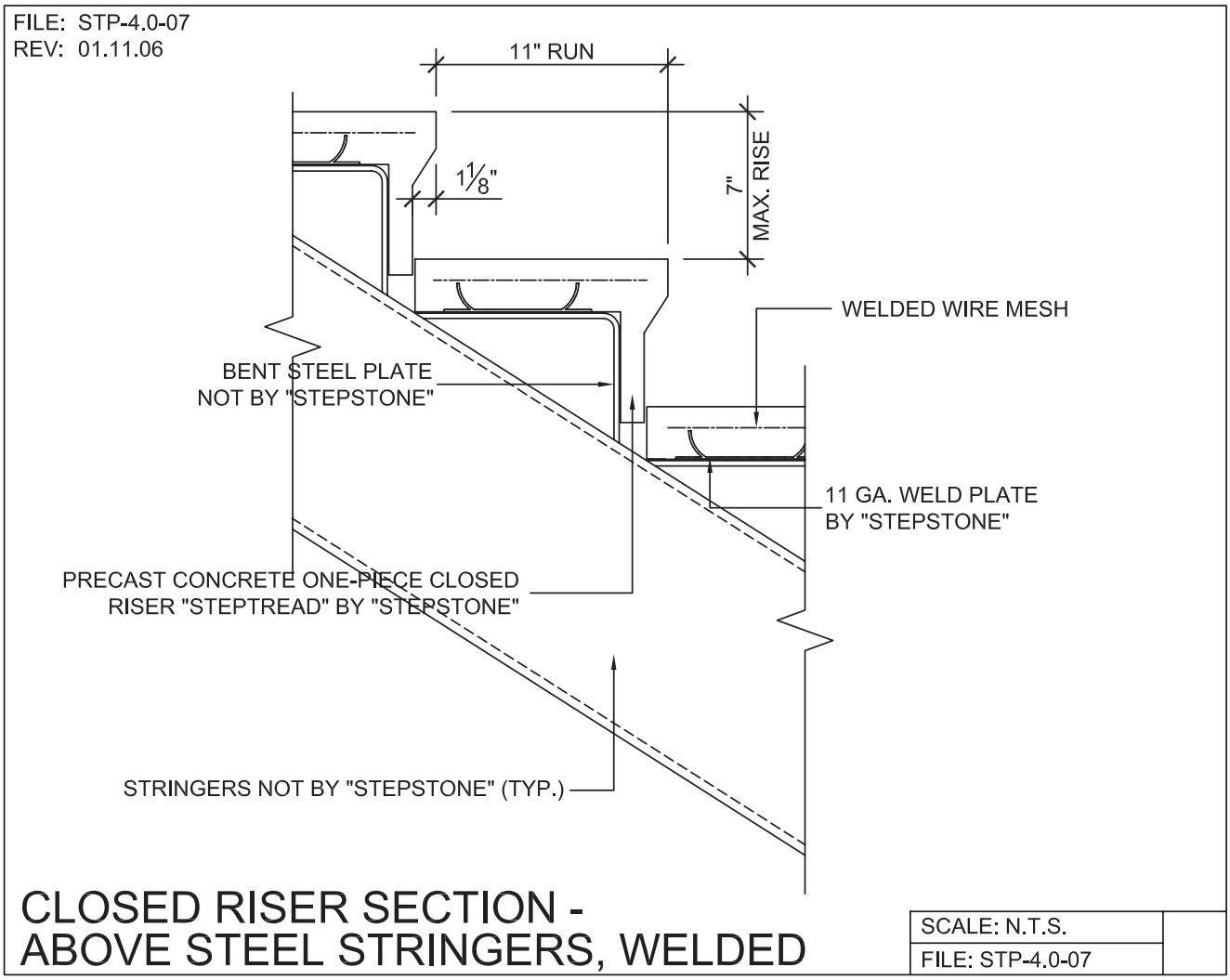

PRECAST CONCRETE TREADS, LANDINGS, AND BALCONIES SHOWN ON PLANS SHALL BE FROM THE "STEPTREAD" SYSTEM BY "STEPSTONE, INC." OF GARDENA, CA. FOR STEEL OR WOOD CONSTRUCTION. THE MANUFACTURER IS TO SUPPLY ALL PRECAST CONCRETE PARTS WITH EACH "STEPTREAD" AND FEATURING EITHER CAST IN THREADED INSERTS FOR BOLTING OR AN EMBEDDED BOTTOM WELD PLATE FOR WELDING. ALL REINFORCING AND CONNECTIONS WILL BE ZINC PLATED. ONLY ITEMS NOTED BY "STEPSTONE, INC." SHALL BE FURNISHED BY "STEPSTONE, INC." SUCH ITEMS SHALL BE INSTALLED BY OTHERS.

800.572.9029 Nationwide Distribution stepstoneinc.com
17025 SO. MAIN ST. GARDENA, CA 90248 | 310-327-7474
13238 SO. FIGUEROA ST. LOS ANGELES, CA 90061 | www.stepstoneinc.com

FILE: STP-4.0-08
REV: 01.11.06

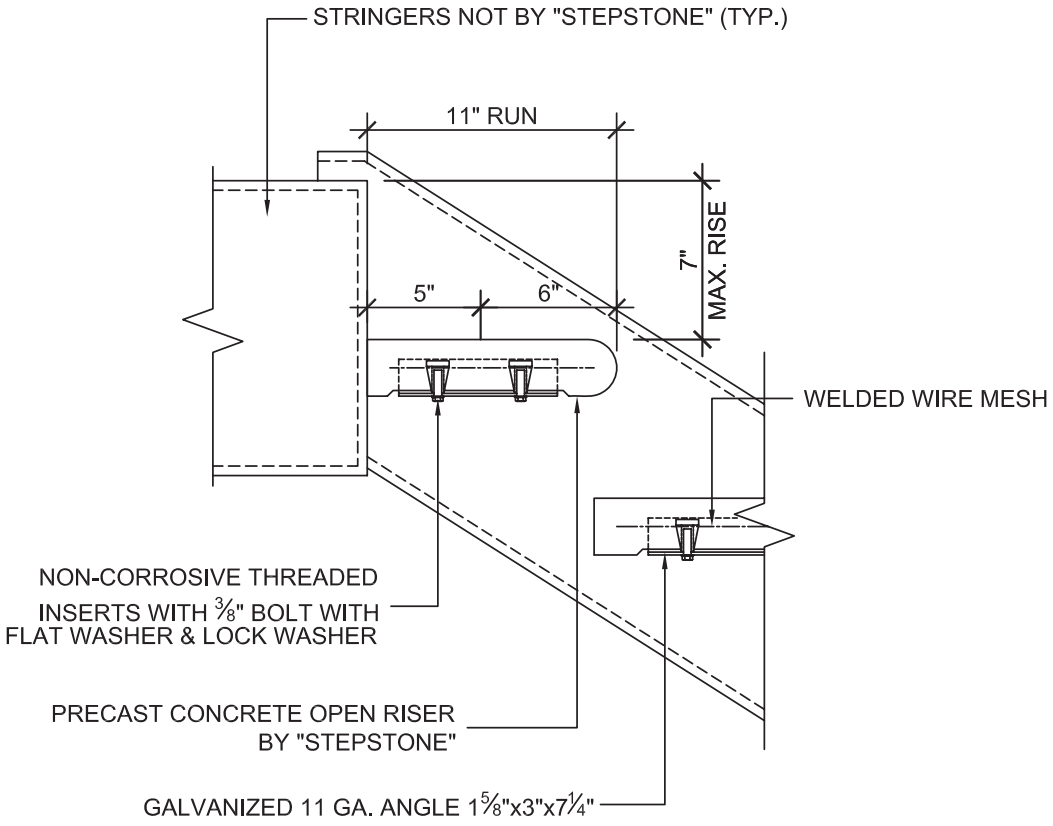

TOP STEP BETWEEN STEEL STRINGERS, BOLT-ON CONCEALED

SCALE: N.T.S.	
FILE: STP-4.0-08	

PRECAST CONCRETE TREADS, LANDINGS, AND BALCONIES SHOWN ON PLANS SHALL BE FROM THE "STEPTREAD" SYSTEM BY "STEPSTONE, INC." OF GARDENA, CA. FOR STEEL OR WOOD CONSTRUCTION. THE MANUFACTURER IS TO SUPPLY ALL PRECAST CONCRETE PARTS WITH EACH "STEPTREAD" AND FEATURING EITHER CAST IN THREADED INSERTS FOR BOLTING OR AN EMBEDDED BOTTOM WELD PLATE FOR WELDING. ALL REINFORCING AND CONNECTIONS WILL BE ZINC PLATED. ONLY ITEMS NOTED BY "STEPSTONE, INC." SHALL BE FURNISHED BY "STEPSTONE, INC." SUCH ITEMS SHALL BE INSTALLED BY OTHERS.

800.572.9029 Nationwide Distribution stepstoneinc.com
17025 SO. MAIN ST. GARDENA, CA 90248 | 310-327-7474
13238 SO. FIGUEROA ST. LOS ANGELES, CA 90061 | www.stepstoneinc.com

FILE: STP-4.0-09
REV: 01.11.06

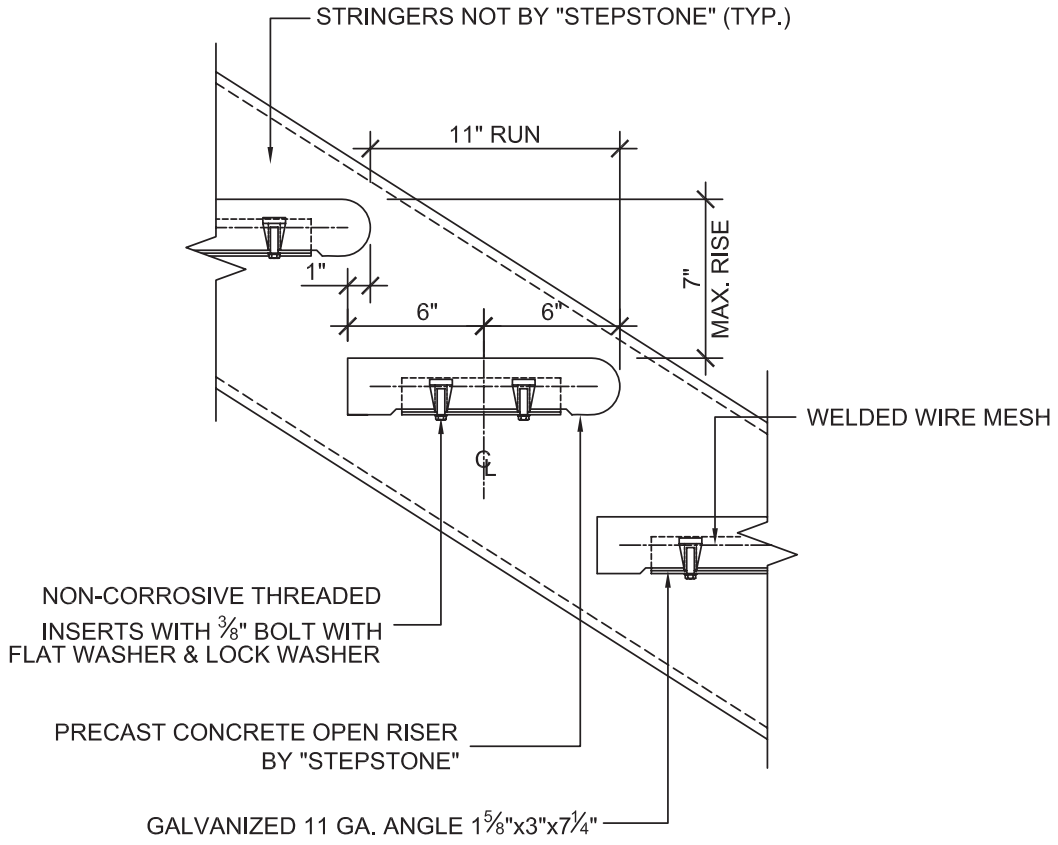

OPEN RISER SECTION - BOLT ON, BETWEEN STEEL STRINGERS, CONCEALED ANGLE

SCALE: N.T.S.	
FILE: STP-4.0-09	

PRECAST CONCRETE TREADS, LANDINGS, AND BALCONIES SHOWN ON PLANS SHALL BE FROM THE "STEPTREAD" SYSTEM BY "STEPSTONE, INC." OF GARDENA, CA. FOR STEEL OR WOOD CONSTRUCTION. THE MANUFACTURER IS TO SUPPLY ALL PRECAST CONCRETE PARTS WITH EACH "STEPTREAD" AND FEATURING EITHER CAST IN THREADED INSERTS FOR BOLTING OR AN EMBEDDED BOTTOM WELD PLATE FOR WELDING. ALL REINFORCING AND CONNECTIONS WILL BE ZINC PLATED. ONLY ITEMS NOTED BY "STEPSTONE, INC." SHALL BE FURNISHED BY "STEPSTONE, INC." SUCH ITEMS SHALL BE INSTALLED BY OTHERS.

800.572.9029 Nationwide Distribution stepstoneinc.com
17025 SO. MAIN ST. GARDENA, CA 90248 | 310-327-7474
13238 SO. FIGUEROA ST. LOS ANGELES, CA 90061 | www.stepstoneinc.com

FILE: STP-4.0-10
REV: 01.11.06

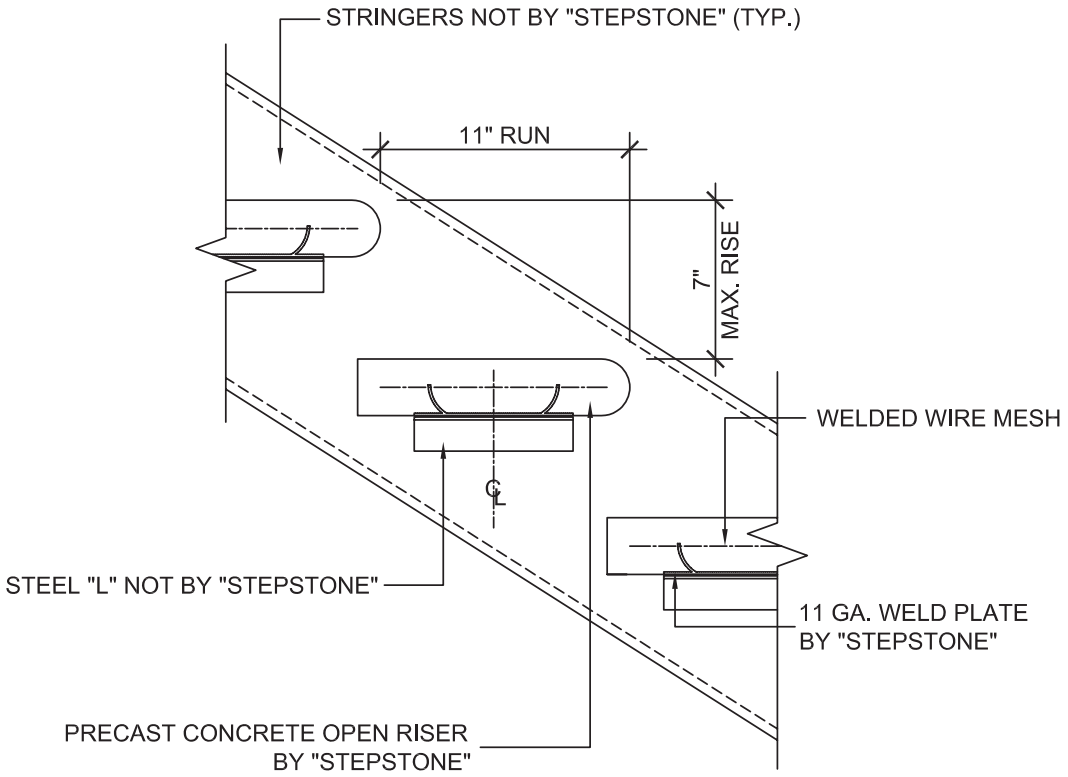

OPEN RISER SECTION - BETWEEN STEEL STRINGERS, WELDED

SCALE: N.T.S.	
FILE: STP-4.0-10	

PRECAST CONCRETE TREADS, LANDINGS, AND BALCONIES SHOWN ON PLANS SHALL BE FROM THE "STEPTREAD" SYSTEM BY "STEPSTONE, INC." OF GARDENA, CA. FOR STEEL OR WOOD CONSTRUCTION. THE MANUFACTURER IS TO SUPPLY ALL PRECAST CONCRETE PARTS WITH EACH "STEPTREAD" AND FEATURING EITHER CAST IN THREADED INSERTS FOR BOLTING OR AN EMBEDDED BOTTOM WELD PLATE FOR WELDING. ALL REINFORCING AND CONNECTIONS WILL BE ZINC PLATED. ONLY ITEMS NOTED BY "STEPSTONE, INC." SHALL BE FURNISHED BY "STEPSTONE, INC." SUCH ITEMS SHALL BE INSTALLED BY OTHERS.

800.572.9029 Nationwide Distribution stepstoneinc.com
17025 SO. MAIN ST. GARDENA, CA 90248 | 310-327-7474
13238 SO. FIGUEROA ST. LOS ANGELES, CA 90061 | www.stepstoneinc.com

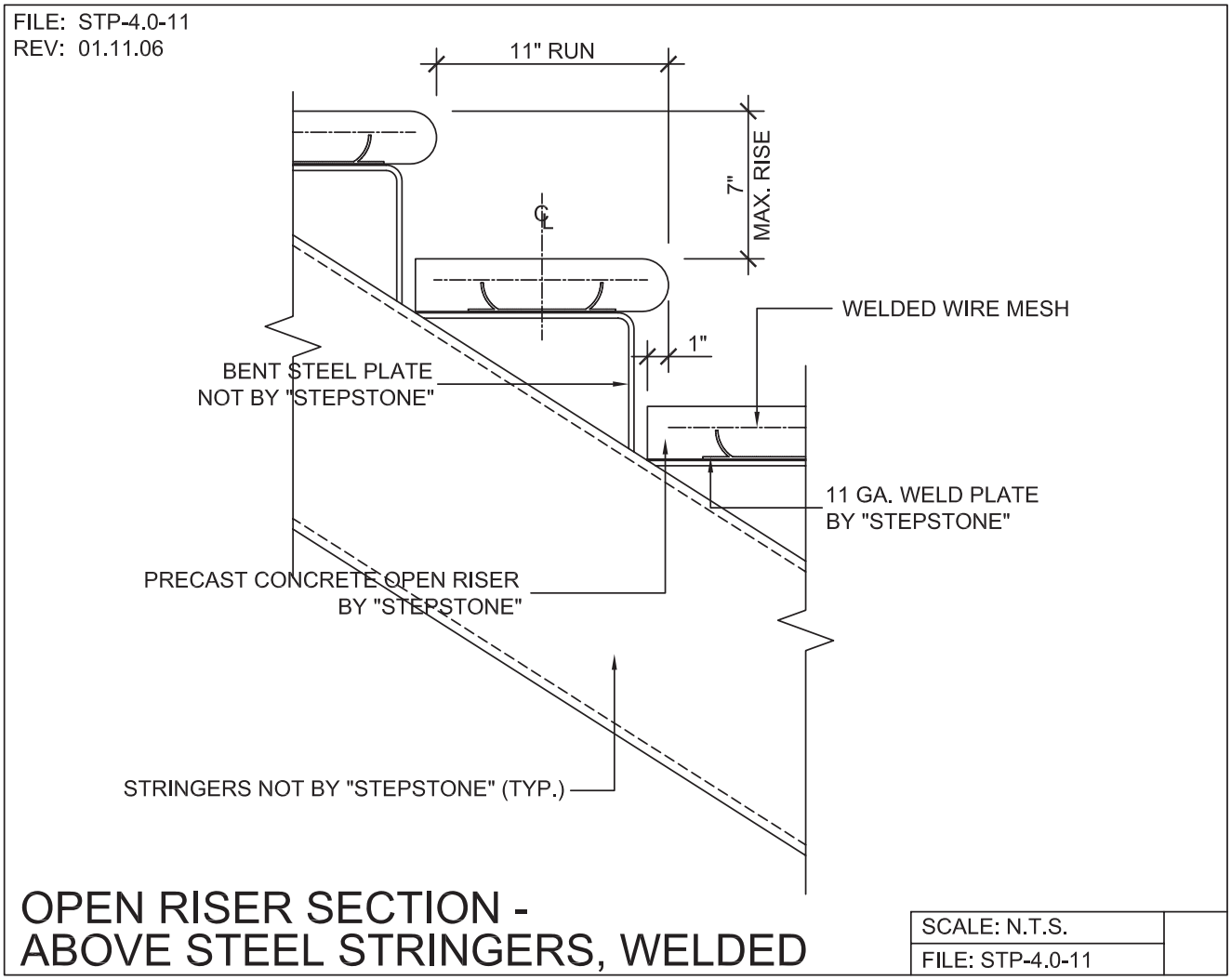

PRECAST CONCRETE TREADS, LANDINGS, AND BALCONIES SHOWN ON PLANS SHALL BE FROM THE "STEPTREAD" SYSTEM BY "STEPSTONE, INC." OF GARDENA, CA. FOR STEEL OR WOOD CONSTRUCTION. THE MANUFACTURER IS TO SUPPLY ALL PRECAST CONCRETE PARTS WITH EACH "STEPTREAD" AND FEATURING EITHER CAST IN THREADED INSERTS FOR BOLTING OR AN EMBEDDED BOTTOM WELD PLATE FOR WELDING. ALL REINFORCING AND CONNECTIONS WILL BE ZINC PLATED. ONLY ITEMS NOTED BY "STEPSTONE, INC." SHALL BE FURNISHED BY "STEPSTONE, INC." SUCH ITEMS SHALL BE INSTALLED BY OTHERS.

800.572.9029 Nationwide Distribution stepstoneinc.com
17025 SO. MAIN ST. GARDENA, CA 90248 | 310-327-7474
13238 SO. FIGUEROA ST. LOS ANGELES, CA 90061 | www.stepstoneinc.com

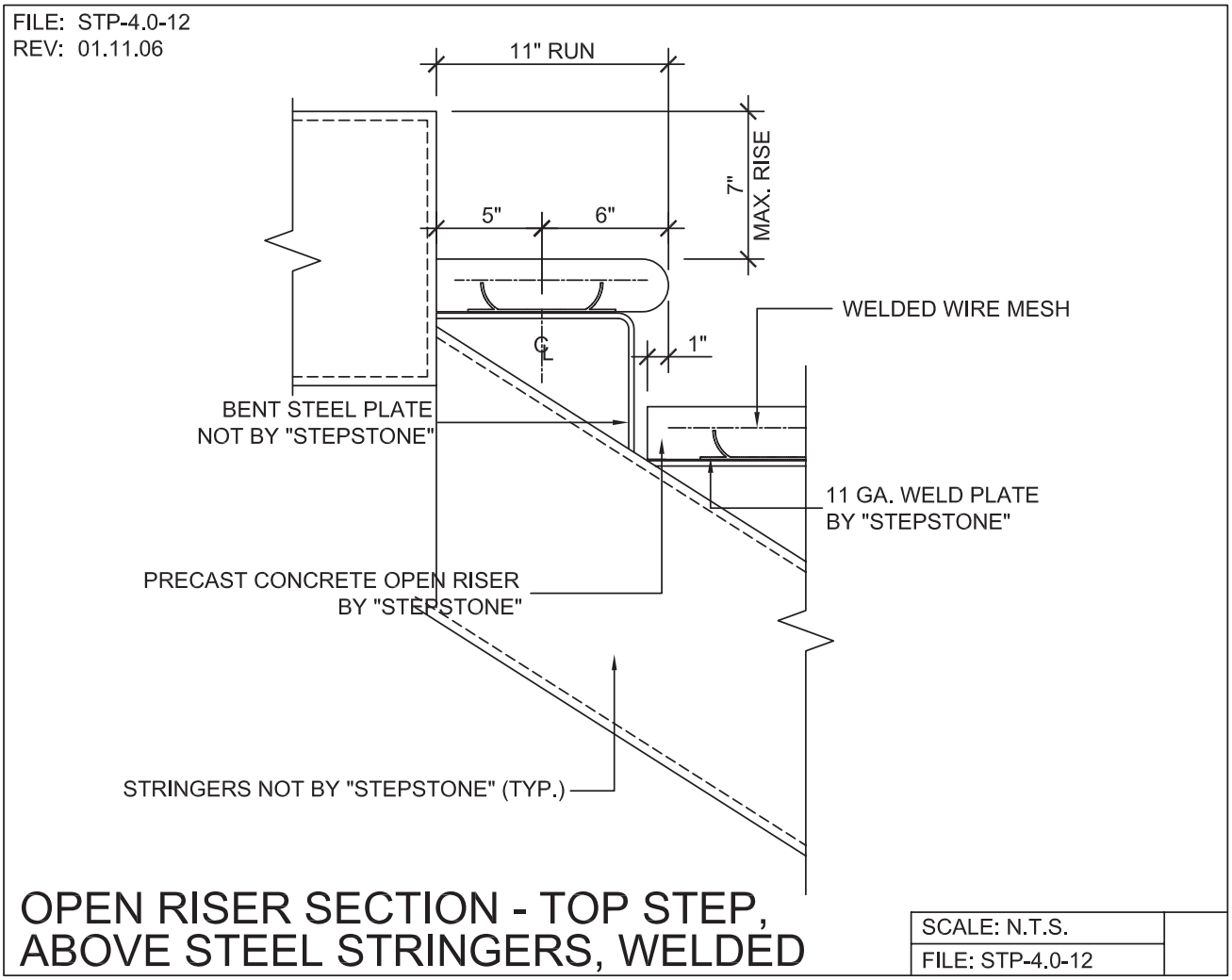

PRECAST CONCRETE TREADS, LANDINGS, AND BALCONIES SHOWN ON PLANS SHALL BE FROM THE "STEPTREAD" SYSTEM BY "STEPSTONE, INC." OF GARDENA, CA. FOR STEEL OR WOOD CONSTRUCTION. THE MANUFACTURER IS TO SUPPLY ALL PRECAST CONCRETE PARTS WITH EACH "STEPTREAD" AND FEATURING EITHER CAST IN THREADED INSERTS FOR BOLTING OR AN EMBEDDED BOTTOM WELD PLATE FOR WELDING. ALL REINFORCING AND CONNECTIONS WILL BE ZINC PLATED. ONLY ITEMS NOTED BY "STEPSTONE, INC." SHALL BE FURNISHED BY "STEPSTONE, INC." SUCH ITEMS SHALL BE INSTALLED BY OTHERS.

800.572.9029 Nationwide Distribution stepstoneinc.com
17025 SO. MAIN ST. GARDENA, CA 90248 | 310-327-7474
13238 SO. FIGUEROA ST. LOS ANGELES, CA 90061 | www.stepstoneinc.com

FILE: STP-4.0-13
REV: 01.11.06

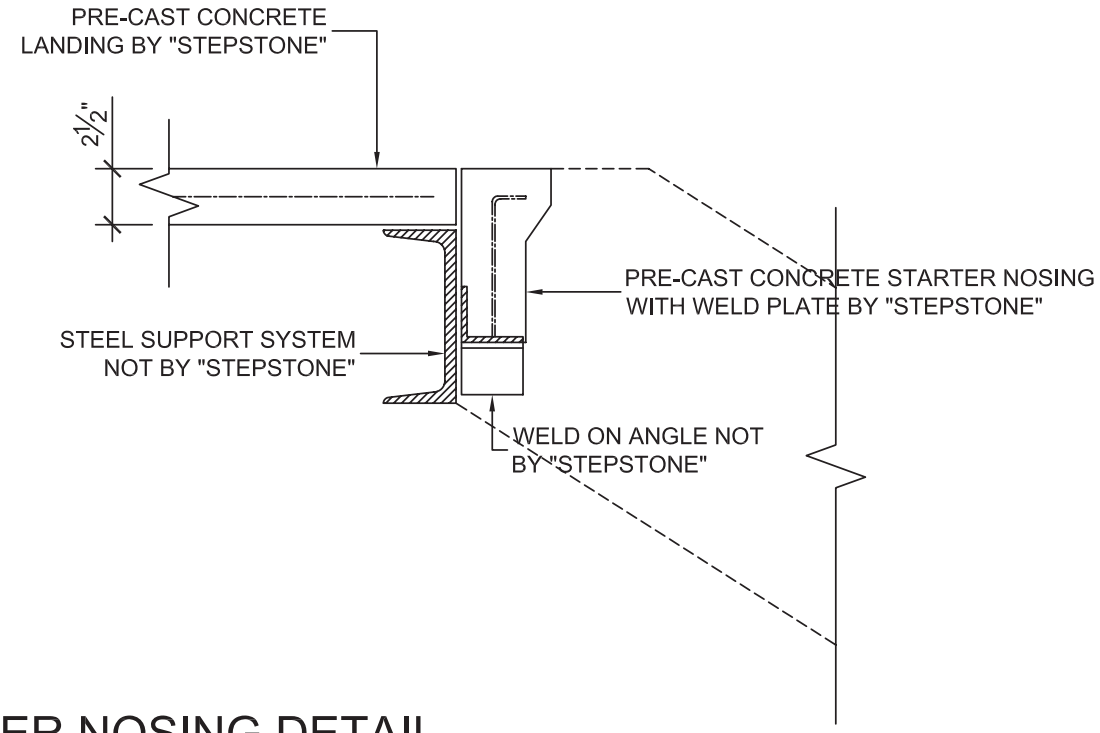

STARTER NOSING DETAIL BETWEEN STRINGERS - WELDED

SCALE: N.T.S.
FILE: STP-4.0-13

PRECAST CONCRETE TREADS, LANDINGS, AND BALCONIES SHOWN ON PLANS SHALL BE FROM THE "STEPTREAD" SYSTEM BY "STEPSTONE, INC." OF GARDENA, CA. FOR STEEL OR WOOD CONSTRUCTION. THE MANUFACTURER IS TO SUPPLY ALL PRECAST CONCRETE PARTS WITH EACH "STEPTREAD" AND FEATURING EITHER CAST IN THREADED INSERTS FOR BOLTING OR AN EMBEDDED BOTTOM WELD PLATE FOR WELDING. ALL REINFORCING AND CONNECTIONS WILL BE ZINC PLATED. ONLY ITEMS NOTED BY "STEPSTONE, INC." SHALL BE FURNISHED BY "STEPSTONE, INC." SUCH ITEMS SHALL BE INSTALLED BY OTHERS.

800.572.9029 Nationwide Distribution stepstoneinc.com
17025 SO. MAIN ST. GARDENA, CA 90248 | 310-327-7474
13238 SO. FIGUEROA ST. LOS ANGELES, CA 90061 | www.stepstoneinc.com

FILE: STP-4.0-14
REV: 01.11.06

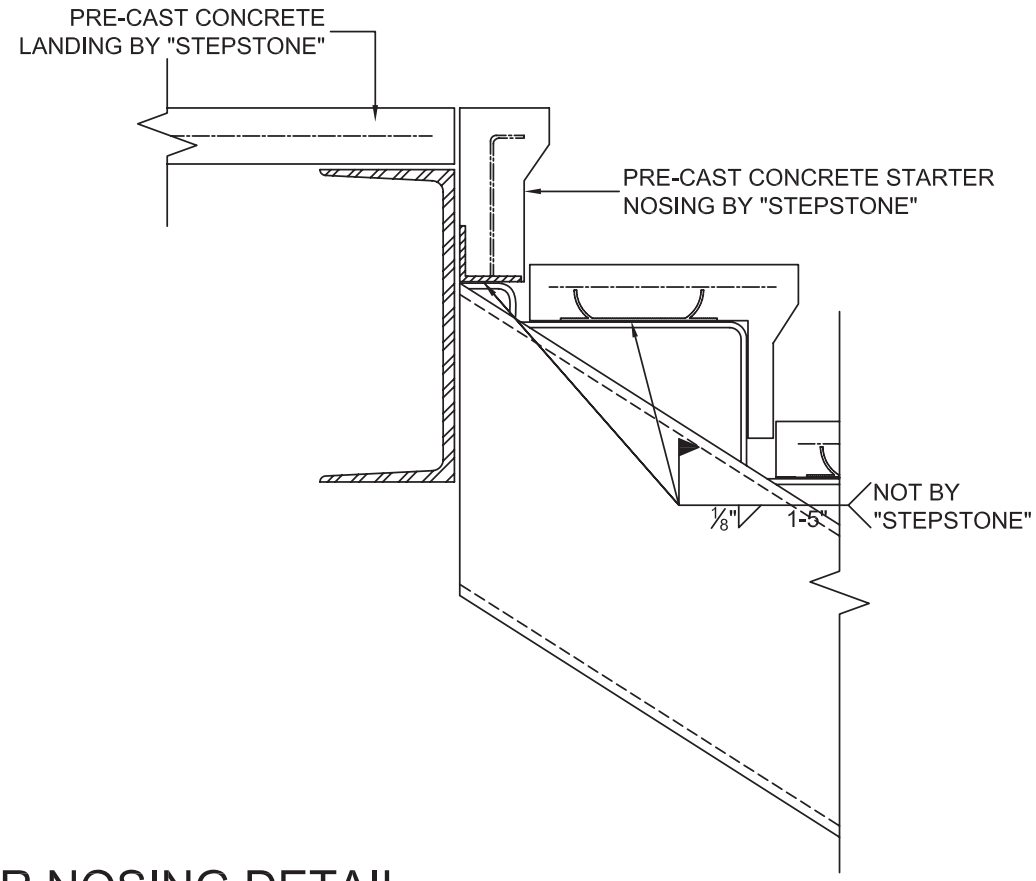

STARTER NOSING DETAIL ABOVE STRINGERS - WELDED

SCALE: N.T.S.
FILE: STP-4.0-14

PRECAST CONCRETE TREADS, LANDINGS, AND BALCONIES SHOWN ON PLANS SHALL BE FROM THE "STEPTREAD" SYSTEM BY "STEPSTONE, INC." OF GARDENA, CA. FOR STEEL OR WOOD CONSTRUCTION. THE MANUFACTURER IS TO SUPPLY ALL PRECAST CONCRETE PARTS WITH EACH "STEPTREAD" AND FEATURING EITHER CAST IN THREADED INSERTS FOR BOLTING OR AN EMBEDDED BOTTOM WELD PLATE FOR WELDING. ALL REINFORCING AND CONNECTIONS WILL BE ZINC PLATED. ONLY ITEMS NOTED BY "STEPSTONE, INC." SHALL BE FURNISHED BY "STEPSTONE, INC." SUCH ITEMS SHALL BE INSTALLED BY OTHERS.

800.572.9029 Nationwide Distribution stepstoneinc.com
17025 SO. MAIN ST. GARDENA, CA 90248 | 310-327-7474
13238 SO. FIGUEROA ST. LOS ANGELES, CA 90061 | www.stepstoneinc.com

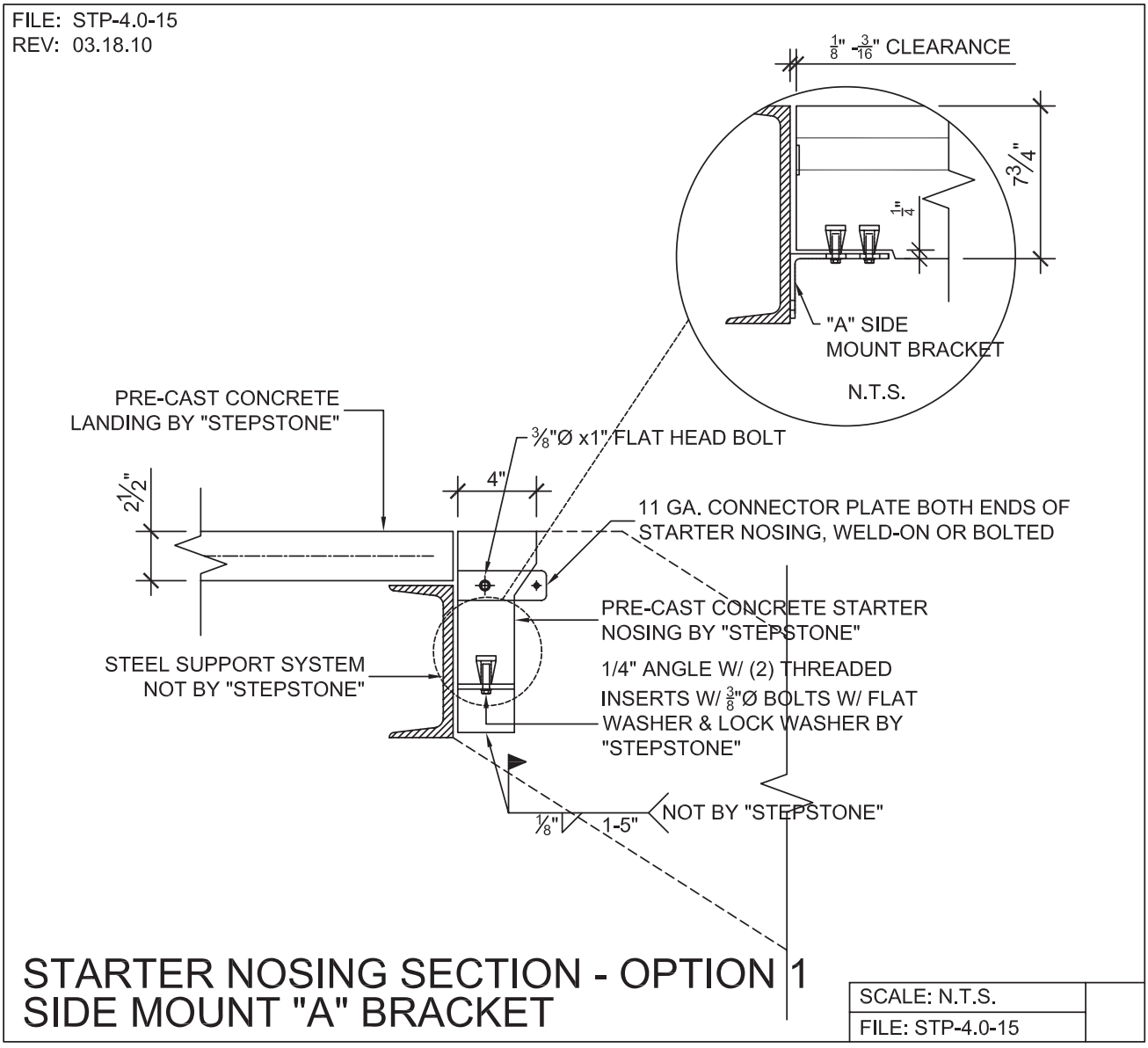

PRECAST CONCRETE TREADS, LANDINGS, AND BALCONIES SHOWN ON PLANS SHALL BE FROM THE "STEPTREAD" SYSTEM BY "STEPSTONE, INC." OF GARDENA, CA. FOR STEEL OR WOOD CONSTRUCTION. THE MANUFACTURER IS TO SUPPLY ALL PRECAST CONCRETE PARTS WITH EACH "STEPTREAD" AND FEATURING EITHER CAST IN THREADED INSERTS FOR BOLTING OR AN EMBEDDED BOTTOM WELD PLATE FOR WELDING. ALL REINFORCING AND CONNECTIONS WILL BE ZINC PLATED. ONLY ITEMS NOTED BY "STEPSTONE, INC." SHALL BE FURNISHED BY "STEPSTONE, INC." SUCH ITEMS SHALL BE INSTALLED BY OTHERS.

800.572.9029 Nationwide Distribution stepstoneinc.com
17025 SO. MAIN ST. GARDENA, CA 90248 | 310-327-7474
13238 SO. FIGUEROA ST. LOS ANGELES, CA 90061 | www.stepstoneinc.com

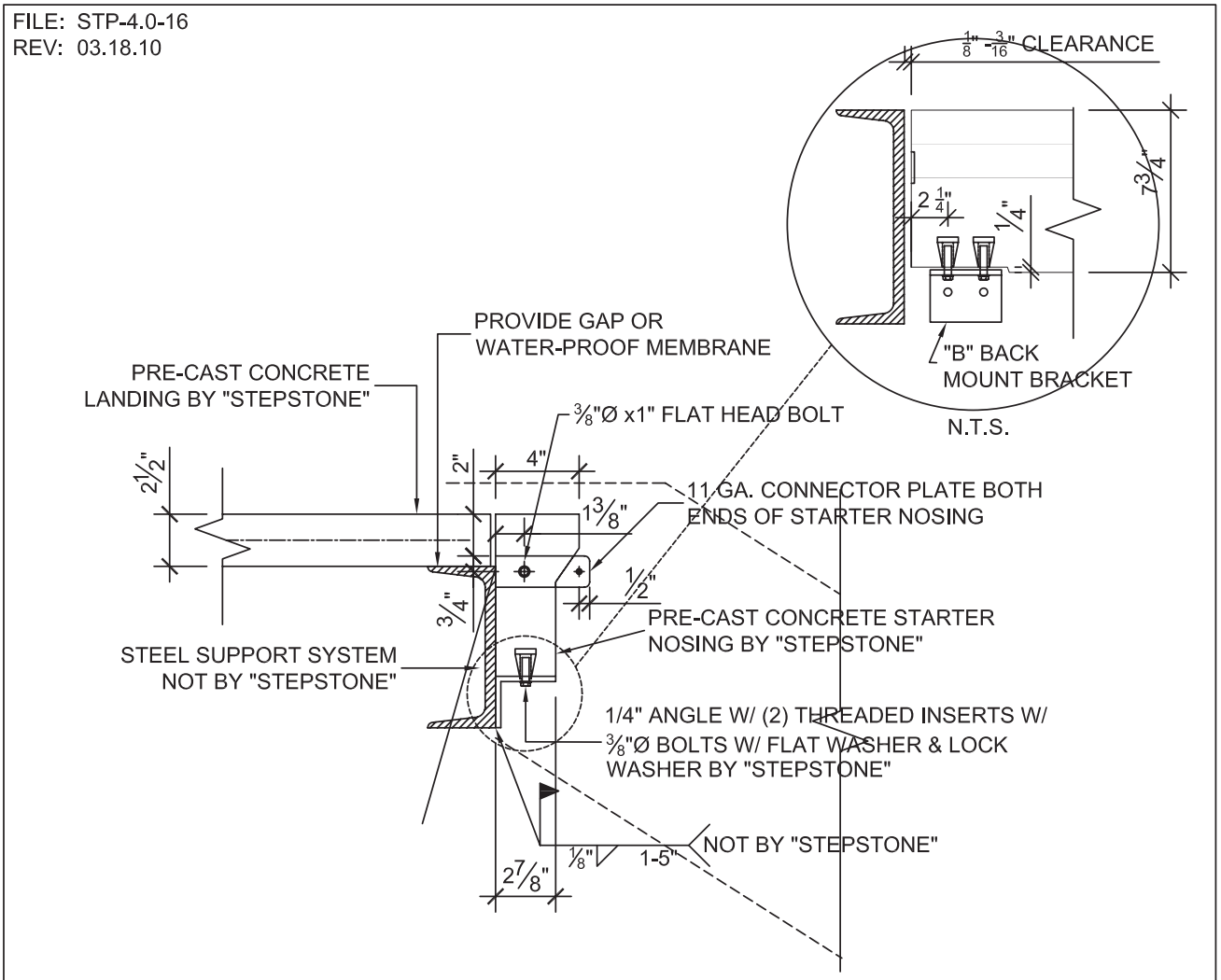

STARTER NOSING SECTION - OPTION 2
BACK MOUNT "B" BRACKET

SCALE: N.T.S.	
FILE: STP-4.0-16	

PRECAST CONCRETE TREADS, LANDINGS, AND BALCONIES SHOWN ON PLANS SHALL BE FROM THE "STEPTREAD" SYSTEM BY "STEPSTONE, INC." OF GARDENA, CA. FOR STEEL OR WOOD CONSTRUCTION. THE MANUFACTURER IS TO SUPPLY ALL PRECAST CONCRETE PARTS WITH EACH "STEPTREAD" AND FEATURING EITHER CAST IN THREADED INSERTS FOR BOLTING OR AN EMBEDDED BOTTOM WELD PLATE FOR WELDING. ALL REINFORCING AND CONNECTIONS WILL BE ZINC PLATED. ONLY ITEMS NOTED BY "STEPSTONE, INC." SHALL BE FURNISHED BY "STEPSTONE, INC." SUCH ITEMS SHALL BE INSTALLED BY OTHERS.

800.572.9029 Nationwide Distribution stepstoneinc.com
17025 SO. MAIN ST. GARDENA, CA 90248 | 310-327-7474
13238 SO. FIGUEROA ST. LOS ANGELES, CA 90061 | www.stepstoneinc.com

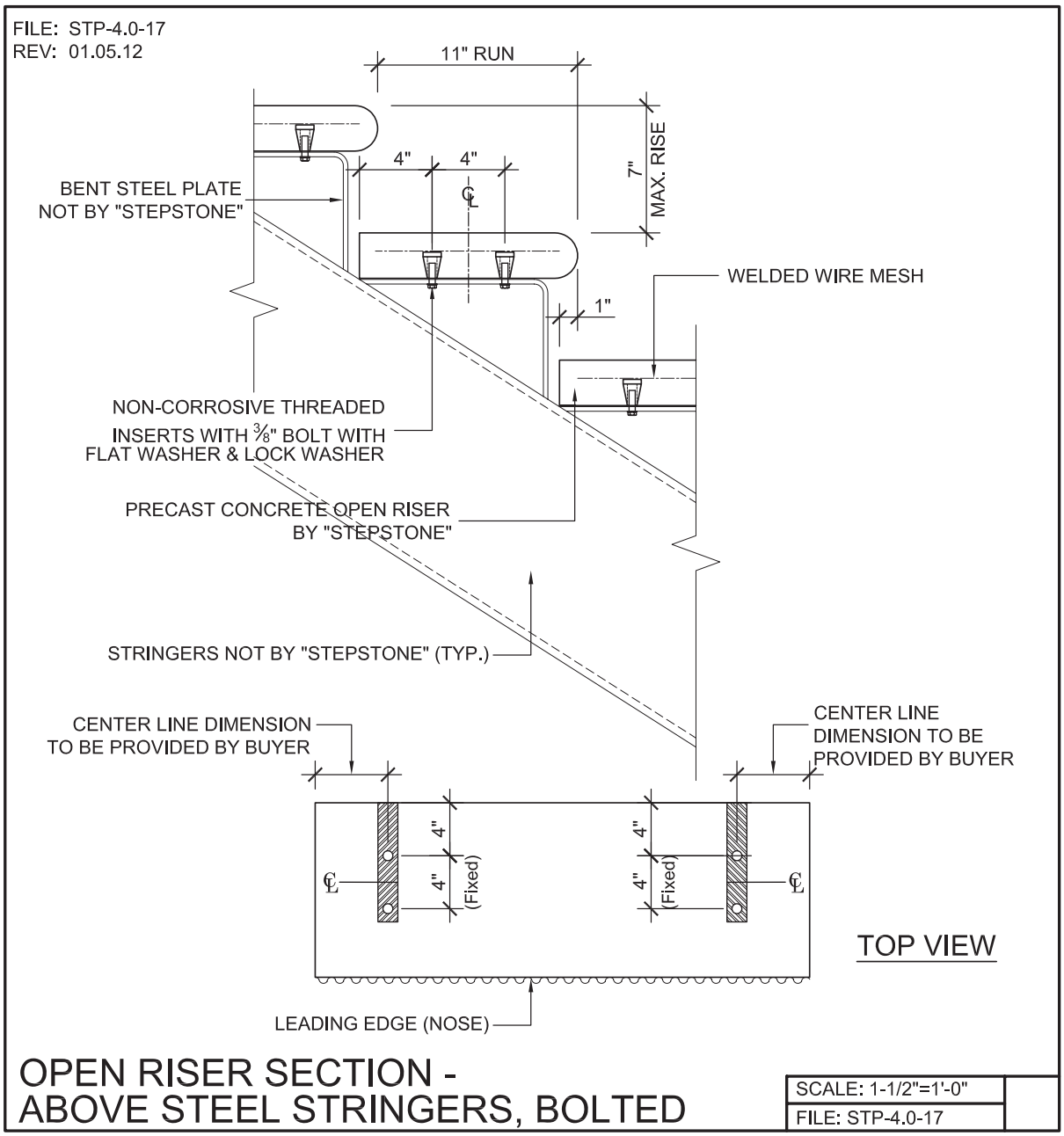

PRECAST CONCRETE TREADS, LANDINGS, AND BALCONIES SHOWN ON PLANS SHALL BE FROM THE "STEPTREAD" SYSTEM BY "STEPSTONE, INC." OF GARDENA, CA. FOR STEEL OR WOOD CONSTRUCTION. THE MANUFACTURER IS TO SUPPLY ALL PRECAST CONCRETE PARTS WITH EACH "STEPTREAD" AND FEATURING EITHER CAST IN THREADED INSERTS FOR BOLTING OR AN EMBEDDED BOTTOM WELD PLATE FOR WELDING. ALL REINFORCING AND CONNECTIONS WILL BE ZINC PLATED. ONLY ITEMS NOTED BY "STEPSTONE, INC." SHALL BE FURNISHED BY "STEPSTONE, INC." SUCH ITEMS SHALL BE INSTALLED BY OTHERS.

800.572.9029 Nationwide Distribution stepstoneinc.com
17025 SO. MAIN ST. GARDENA, CA 90248 | 310-327-7474
13238 SO. FIGUEROA ST. LOS ANGELES, CA 90061 | www.stepstoneinc.com

FILE: STP-4.0-18
REV: 01.05.12

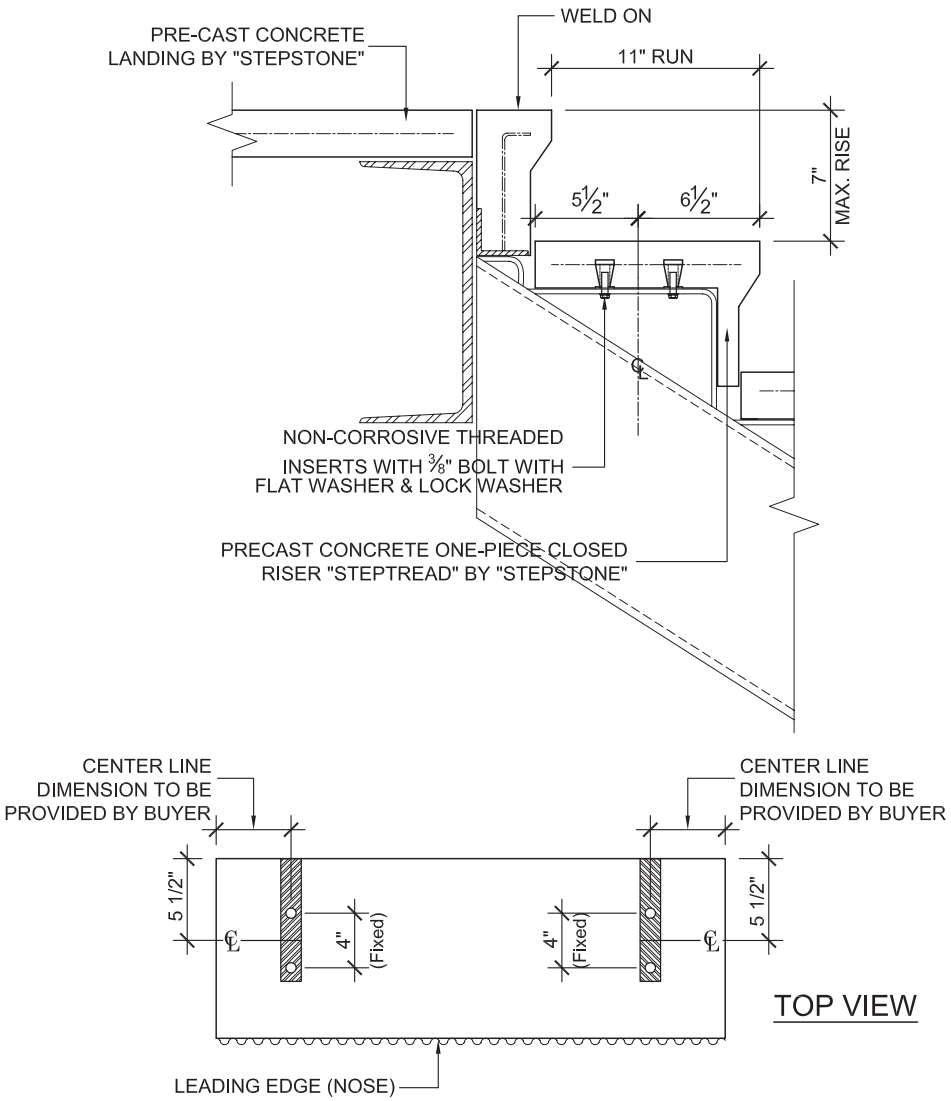

CLOSED RISER SECTION - ABOVE STEEL STRINGERS - BOLTED

SCALE: 1-1/2"=1'-0"
FILE: STP-4.0-18

PRECAST CONCRETE TREADS, LANDINGS, AND BALCONIES SHOWN ON PLANS SHALL BE FROM THE "STEPTREAD" SYSTEM BY "STEPSTONE, INC." OF GARDENA, CA. FOR STEEL OR WOOD CONSTRUCTION. THE MANUFACTURER IS TO SUPPLY ALL PRECAST CONCRETE PARTS WITH EACH "STEPTREAD" AND FEATURING EITHER CAST IN THREADED INSERTS FOR BOLTING OR AN EMBEDDED BOTTOM WELD PLATE FOR WELDING. ALL REINFORCING AND CONNECTIONS WILL BE ZINC PLATED. ONLY ITEMS NOTED BY "STEPSTONE, INC." SHALL BE FURNISHED BY "STEPSTONE, INC." SUCH ITEMS SHALL BE INSTALLED BY OTHERS.

800.572.9029 Nationwide Distribution stepstoneinc.com
17025 SO. MAIN ST. GARDENA, CA 90248 | 310-327-7474
13238 SO. FIGUEROA ST. LOS ANGELES, CA 90061 | www.stepstoneinc.com

FILE: STP-4.1-01
REV: 01.11.06

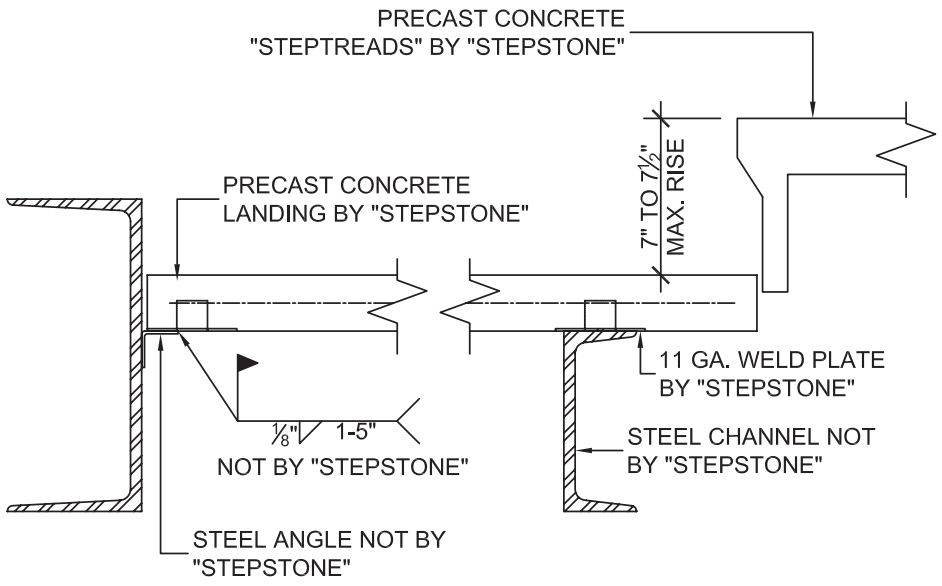

90° LANDING - CLOSED RISER BETWEEN STEEL, WELDED

SCALE: N.T.S.
FILE: STP-4.1-01

PRECAST CONCRETE TREADS, LANDINGS, AND BALCONIES SHOWN ON PLANS SHALL BE FROM THE "STEPTREAD" SYSTEM BY "STEPSTONE, INC." OF GARDENA, CA. FOR STEEL OR WOOD CONSTRUCTION. THE MANUFACTURER IS TO SUPPLY ALL PRECAST CONCRETE PARTS WITH EACH "STEPTREAD" AND FEATURING EITHER CAST IN THREADED INSERTS FOR BOLTING OR AN EMBEDDED BOTTOM WELD PLATE FOR WELDING. ALL REINFORCING AND CONNECTIONS WILL BE ZINC PLATED. ONLY ITEMS NOTED BY "STEPSTONE, INC." SHALL BE FURNISHED BY "STEPSTONE, INC." SUCH ITEMS SHALL BE INSTALLED BY OTHERS.

800.572.9029 Nationwide Distribution stepstoneinc.com
17025 SO. MAIN ST. GARDENA, CA 90248 | 310-327-7474
13238 SO. FIGUEROA ST. LOS ANGELES, CA 90061 | www.stepstoneinc.com

FILE: STP-4.1-02
REV: 01.11.06

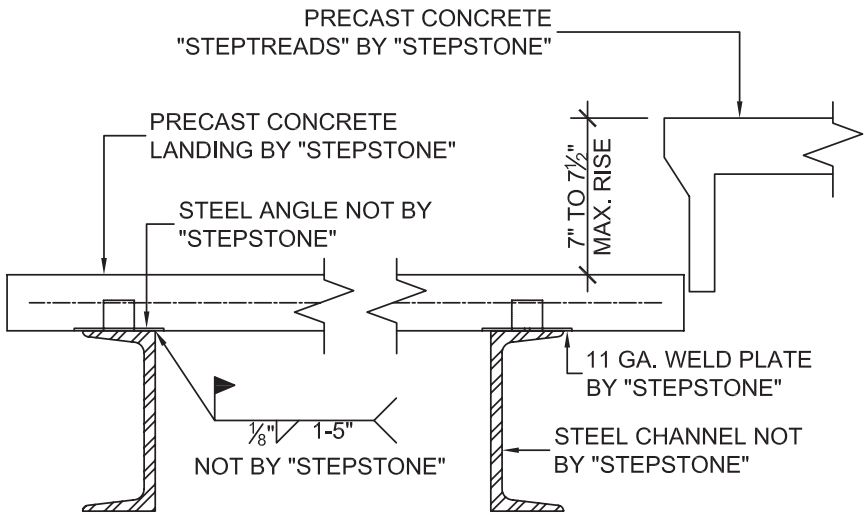

90° LANDING - CLOSED RISER ABOVE STEEL, WELDED

SCALE: N.T.S.
FILE: STP-4.1-02

PRECAST CONCRETE TREADS, LANDINGS, AND BALCONIES SHOWN ON PLANS SHALL BE FROM THE "STEPTREAD" SYSTEM BY "STEPSTONE, INC." OF GARDENA, CA. FOR STEEL OR WOOD CONSTRUCTION. THE MANUFACTURER IS TO SUPPLY ALL PRECAST CONCRETE PARTS WITH EACH "STEPTREAD" AND FEATURING EITHER CAST IN THREADED INSERTS FOR BOLTING OR AN EMBEDDED BOTTOM WELD PLATE FOR WELDING. ALL REINFORCING AND CONNECTIONS WILL BE ZINC PLATED. ONLY ITEMS NOTED BY "STEPSTONE, INC." SHALL BE FURNISHED BY "STEPSTONE, INC." SUCH ITEMS SHALL BE INSTALLED BY OTHERS.

800.572.9029 Nationwide Distribution stepstoneinc.com
17025 SO. MAIN ST. GARDENA, CA 90248 | 310-327-7474
13238 SO. FIGUEROA ST. LOS ANGELES, CA 90061 | www.stepstoneinc.com

FILE: STP-4.1-03
REV: 01.11.06

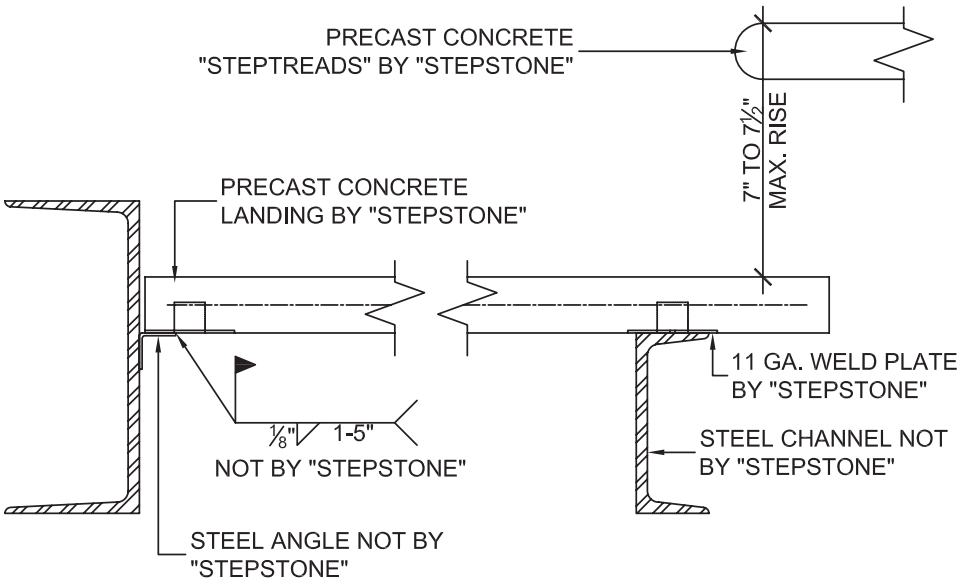

90° LANDING - OPEN RISER BETWEEN STEEL, WELDED

SCALE: N.T.S.	
FILE: STP-4.1-03	

PRECAST CONCRETE TREADS, LANDINGS, AND BALCONIES SHOWN ON PLANS SHALL BE FROM THE "STEPTREAD" SYSTEM BY "STEPSTONE, INC." OF GARDENA, CA. FOR STEEL OR WOOD CONSTRUCTION. THE MANUFACTURER IS TO SUPPLY ALL PRECAST CONCRETE PARTS WITH EACH "STEPTREAD" AND FEATURING EITHER CAST IN THREADED INSERTS FOR BOLTING OR AN EMBEDDED BOTTOM WELD PLATE FOR WELDING. ALL REINFORCING AND CONNECTIONS WILL BE ZINC PLATED. ONLY ITEMS NOTED BY "STEPSTONE, INC." SHALL BE FURNISHED BY "STEPSTONE, INC." SUCH ITEMS SHALL BE INSTALLED BY OTHERS.

800.572.9029 Nationwide Distribution stepstoneinc.com
17025 SO. MAIN ST. GARDENA, CA 90248 | 310-327-7474
13238 SO. FIGUEROA ST. LOS ANGELES, CA 90061 | www.stepstoneinc.com

FILE: STP-4.1-04
REV: 01.11.06

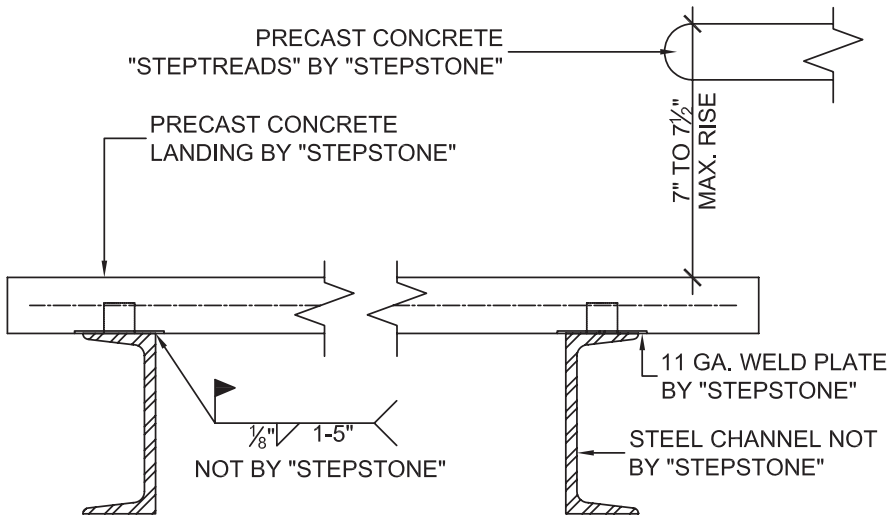

90° LANDING - OPEN RISER ABOVE STEEL, WELDED

SCALE: N.T.S.
FILE: STP-4.1-04

PRECAST CONCRETE TREADS, LANDINGS, AND BALCONIES SHOWN ON PLANS SHALL BE FROM THE "STEPTREAD" SYSTEM BY "STEPSTONE, INC." OF GARDENA, CA. FOR STEEL OR WOOD CONSTRUCTION. THE MANUFACTURER IS TO SUPPLY ALL PRECAST CONCRETE PARTS WITH EACH "STEPTREAD" AND FEATURING EITHER CAST IN THREADED INSERTS FOR BOLTING OR AN EMBEDDED BOTTOM WELD PLATE FOR WELDING. ALL REINFORCING AND CONNECTIONS WILL BE ZINC PLATED. ONLY ITEMS NOTED BY "STEPSTONE, INC." SHALL BE FURNISHED BY "STEPSTONE, INC." SUCH ITEMS SHALL BE INSTALLED BY OTHERS.

800.572.9029 Nationwide Distribution stepstoneinc.com
17025 SO. MAIN ST. GARDENA, CA 90248 | 310-327-7474
13238 SO. FIGUEROA ST. LOS ANGELES, CA 90061 | www.stepstoneinc.com

FILE: STP-4.1-05
REV: 01.11.06

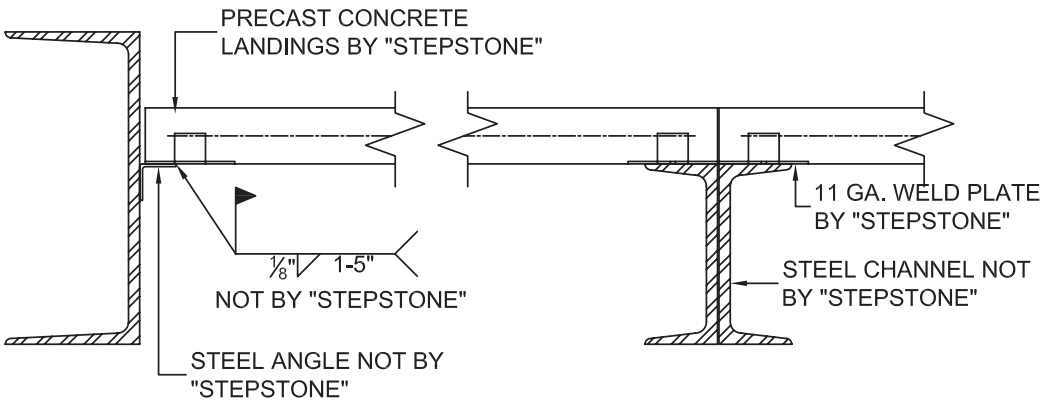

180° LANDING - BETWEEN STEEL, WELDED

SCALE: N.T.S.
FILE: STP-4.1-05

PRECAST CONCRETE TREADS, LANDINGS, AND BALCONIES SHOWN ON PLANS SHALL BE FROM THE "STEPTREAD" SYSTEM BY "STEPSTONE, INC." OF GARDENA, CA. FOR STEEL OR WOOD CONSTRUCTION. THE MANUFACTURER IS TO SUPPLY ALL PRECAST CONCRETE PARTS WITH EACH "STEPTREAD" AND FEATURING EITHER CAST IN THREADED INSERTS FOR BOLTING OR AN EMBEDDED BOTTOM WELD PLATE FOR WELDING. ALL REINFORCING AND CONNECTIONS WILL BE ZINC PLATED. ONLY ITEMS NOTED BY "STEPSTONE, INC." SHALL BE FURNISHED BY "STEPSTONE, INC." SUCH ITEMS SHALL BE INSTALLED BY OTHERS.

800.572.9029 Nationwide Distribution stepstoneinc.com
17025 SO. MAIN ST. GARDENA, CA 90248 | 310-327-7474
13238 SO. FIGUEROA ST. LOS ANGELES, CA 90061 | www.stepstoneinc.com

FILE: STP-4.1-06
REV: 01.11.06

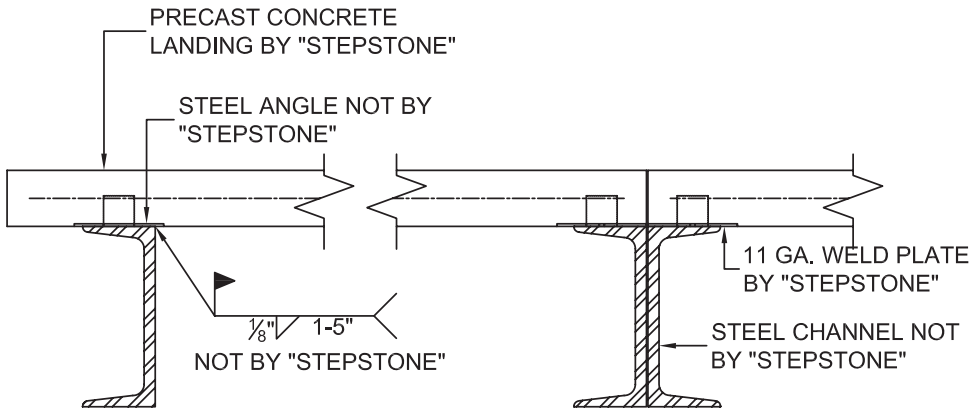

180° LANDING - ABOVE STEEL, WELDED

SCALE: N.T.S.
FILE: STP-4.1-06

PRECAST CONCRETE TREADS, LANDINGS, AND BALCONIES SHOWN ON PLANS SHALL BE FROM THE "STEPTREAD" SYSTEM BY "STEPSTONE, INC." OF GARDENA, CA. FOR STEEL OR WOOD CONSTRUCTION. THE MANUFACTURER IS TO SUPPLY ALL PRECAST CONCRETE PARTS WITH EACH "STEPTREAD" AND FEATURING EITHER CAST IN THREADED INSERTS FOR BOLTING OR AN EMBEDDED BOTTOM WELD PLATE FOR WELDING. ALL REINFORCING AND CONNECTIONS WILL BE ZINC PLATED. ONLY ITEMS NOTED BY "STEPSTONE, INC." SHALL BE FURNISHED BY "STEPSTONE, INC." SUCH ITEMS SHALL BE INSTALLED BY OTHERS.

800.572.9029 Nationwide Distribution stepstoneinc.com
17025 SO. MAIN ST. GARDENA, CA 90248 | 310-327-7474
13238 SO. FIGUEROA ST. LOS ANGELES, CA 90061 | www.stepstoneinc.com

FILE: STP-4.1-07
REV: 03.25.10

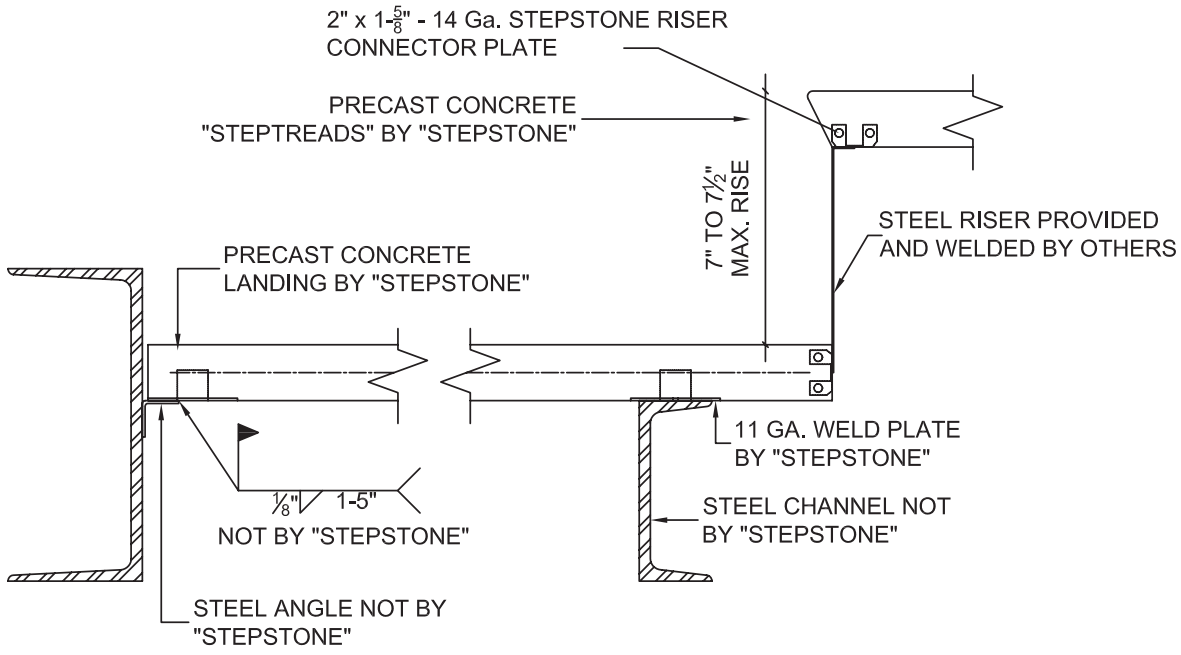

WEDGE PROFILE WITH RISER CONNECTOR PLATES

SCALE: N.T.S.	
FILE: STP-4.1-07	

PRECAST CONCRETE TREADS, LANDINGS, AND BALCONIES SHOWN ON PLANS SHALL BE FROM THE "STEPTREAD" SYSTEM BY "STEPSTONE, INC." OF GARDENA, CA. FOR STEEL OR WOOD CONSTRUCTION. THE MANUFACTURER IS TO SUPPLY ALL PRECAST CONCRETE PARTS WITH EACH "STEPTREAD" AND FEATURING EITHER CAST IN THREADED INSERTS FOR BOLTING OR AN EMBEDDED BOTTOM WELD PLATE FOR WELDING. ALL REINFORCING AND CONNECTIONS WILL BE ZINC PLATED. ONLY ITEMS NOTED BY "STEPSTONE, INC." SHALL BE FURNISHED BY "STEPSTONE, INC." SUCH ITEMS SHALL BE INSTALLED BY OTHERS.

800.572.9029 Nationwide Distribution stepstoneinc.com
17025 SO. MAIN ST. GARDENA, CA 90248 | 310-327-7474
13238 SO. FIGUEROA ST. LOS ANGELES, CA 90061 | www.stepstoneinc.com

FILE: STP-4.1-09
REV: 01.11.06

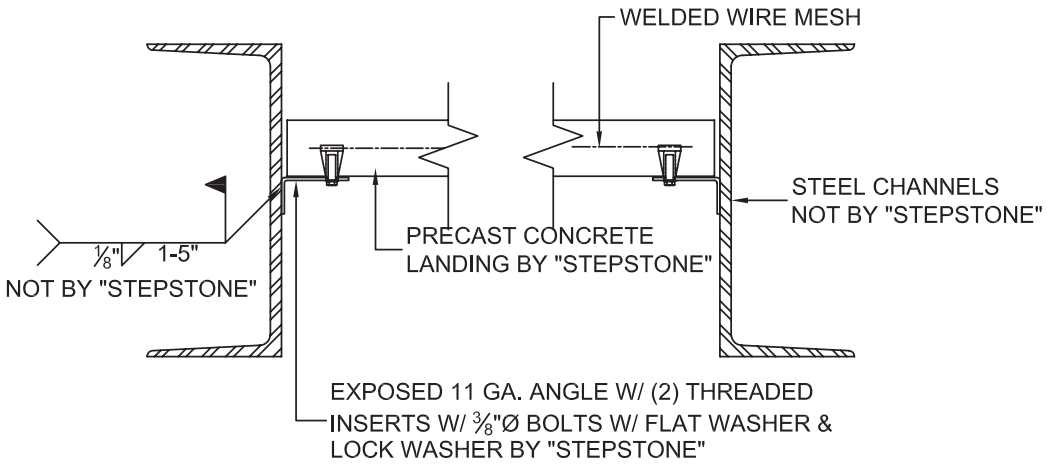

STRAIGHT LANDING - BETWEEN STEEL, BOLTED, EXPOSED

SCALE: N.T.S.	
FILE: STP-4.1-09	

PRECAST CONCRETE TREADS, LANDINGS, AND BALCONIES SHOWN ON PLANS SHALL BE FROM THE "STEPTREAD" SYSTEM BY "STEPSTONE, INC." OF GARDENA, CA. FOR STEEL OR WOOD CONSTRUCTION. THE MANUFACTURER IS TO SUPPLY ALL PRECAST CONCRETE PARTS WITH EACH "STEPTREAD" AND FEATURING EITHER CAST IN THREADED INSERTS FOR BOLTING OR AN EMBEDDED BOTTOM WELD PLATE FOR WELDING. ALL REINFORCING AND CONNECTIONS WILL BE ZINC PLATED. ONLY ITEMS NOTED BY "STEPSTONE, INC." SHALL BE FURNISHED BY "STEPSTONE, INC." SUCH ITEMS SHALL BE INSTALLED BY OTHERS.

800.572.9029 Nationwide Distribution stepstoneinc.com
17025 SO. MAIN ST. GARDENA, CA 90248 | 310-327-7474
13238 SO. FIGUEROA ST. LOS ANGELES, CA 90061 | www.stepstoneinc.com

FILE: STP-4.1-10
REV: 01.11.06

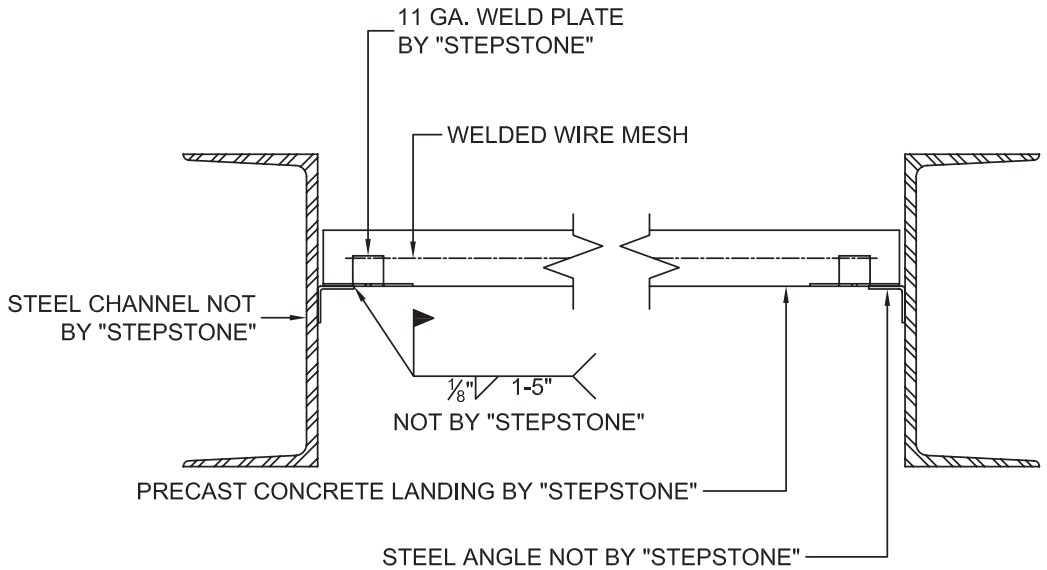

STRAIGHT LANDING DETAIL - BETWEEN STEEL, WELDED

SCALE: N.T.S.	
FILE: STP-4.1-10	

PRECAST CONCRETE TREADS, LANDINGS, AND BALCONIES SHOWN ON PLANS SHALL BE FROM THE "STEPTREAD" SYSTEM BY "STEPSTONE, INC." OF GARDENA, CA. FOR STEEL OR WOOD CONSTRUCTION. THE MANUFACTURER IS TO SUPPLY ALL PRECAST CONCRETE PARTS WITH EACH "STEPTREAD" AND FEATURING EITHER CAST IN THREADED INSERTS FOR BOLTING OR AN EMBEDDED BOTTOM WELD PLATE FOR WELDING. ALL REINFORCING AND CONNECTIONS WILL BE ZINC PLATED. ONLY ITEMS NOTED BY "STEPSTONE, INC." SHALL BE FURNISHED BY "STEPSTONE, INC." SUCH ITEMS SHALL BE INSTALLED BY OTHERS.

800.572.9029 Nationwide Distribution stepstoneinc.com
17025 SO. MAIN ST. GARDENA, CA 90248 | 310-327-7474
13238 SO. FIGUEROA ST. LOS ANGELES, CA 90061 | www.stepstoneinc.com

FILE: STP-4.1-11
REV: 01.11.06

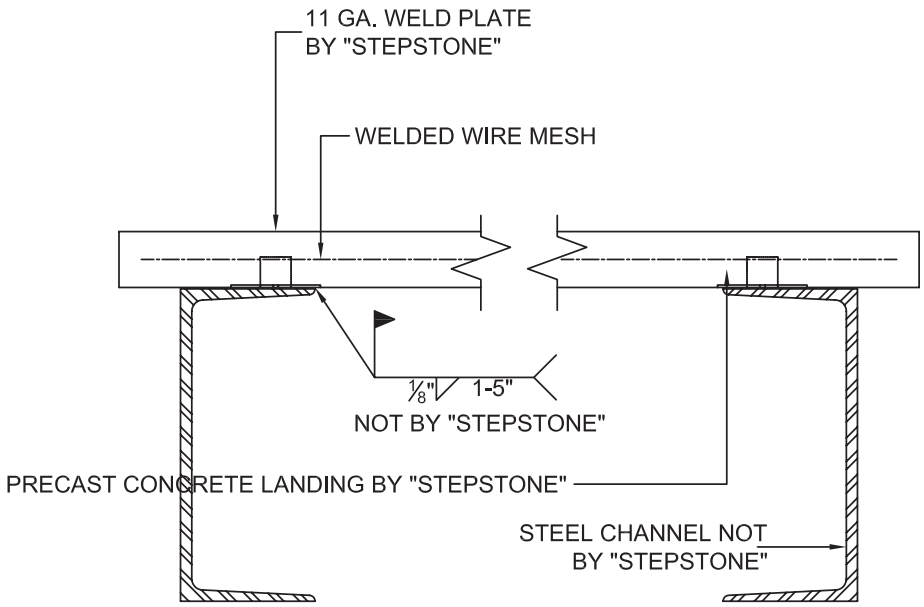

STRAIGHT LANDING - ABOVE STEEL, WELDED

SCALE: N.T.S.
FILE: STP-4.1-11

PRECAST CONCRETE TREADS, LANDINGS, AND BALCONIES SHOWN ON PLANS SHALL BE FROM THE "STEPTREAD" SYSTEM BY "STEPSTONE, INC." OF GARDENA, CA. FOR STEEL OR WOOD CONSTRUCTION. THE MANUFACTURER IS TO SUPPLY ALL PRECAST CONCRETE PARTS WITH EACH "STEPTREAD" AND FEATURING EITHER CAST IN THREADED INSERTS FOR BOLTING OR AN EMBEDDED BOTTOM WELD PLATE FOR WELDING. ALL REINFORCING AND CONNECTIONS WILL BE ZINC PLATED. ONLY ITEMS NOTED BY "STEPSTONE, INC." SHALL BE FURNISHED BY "STEPSTONE, INC." SUCH ITEMS SHALL BE INSTALLED BY OTHERS.

800.572.9029 Nationwide Distribution stepstoneinc.com
17025 SO. MAIN ST. GARDENA, CA 90248 | 310-327-7474
13238 SO. FIGUEROA ST. LOS ANGELES, CA 90061 | www.stepstoneinc.com